ORDER NO. BSD04020073
D6

Service Manual

Sec. 1 *Disassembly*
Sec. 2 *Adjustment & Troubleshooting*
Sec. 3 *Block Diagram*
Sec. 4 *Schematic Diagrams*
Sec. 5 *Circuit Board Diagrams*
Sec. 6 *Exploded Views & Replacement Parts List*

Multi-Format Monitor

BT-H1700BP
BT-H1700BMC

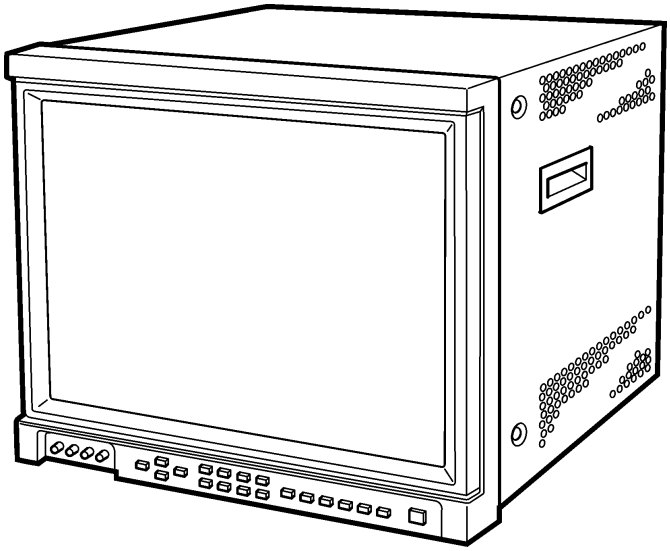

Panasonic

© 2004 Matsushita Electric Industrial Co., Ltd. All rights reserved.
Unauthorized copying and distribution is a violation of law.

⚠ WARNING

This service information is designed for experienced repair technicians only and is not designed for use by the general public. It does not contain warnings or cautions to advise non-technical individuals of potential dangers in attempting to service a product. Products powered by electricity should be serviced or repaired only by experienced professional technicians. Any attempt to service or repair the product or products dealt with in this service information by anyone else could result in serious injury or death.

SPECIFICATIONS

Items	Contents
Type	Multi-format monitor
Picture Tube	17” Flat
Effective Screen Size	33cm(13”) × 25cm(9-7/8”) / 41cm(16-1/4”) [measured diagonally]
Input Signal Frequency	Horizontal : 15kHz/27kHz – 45kHz Vertical : 50Hz – 80Hz
Video Band	Component : 25MHz (-3dB) Video (Y/C) : 8MHz (-3dB)
Horizontal Resolution	1080/60i : 800 TV lines Video (Y/C) : 600 TV lines
Compliant Video Signal	NTSC (3.58 MHz)/PAL (4.43 MHz) (using the BT-YA701P) 480i/576i/480p/576p/1080i (50 Hz/60 Hz/24psF)/720p (50 Hz/60 Hz) (using the BT-YA702P) D1 serial digital (using the BT-YA703P) HD serial digital (using the BT-YA705G)
Input Terminals	Installing an optional input card in SLOT1, 2, or 3 is required. INPUT A/INPUT B : Terminals on the input card in SLOT1. INPUT C/INPUT D : Terminals on the input card in SLOT2. INPUT E/INPUT F : Terminals on the input card in SLOT3.
Remote Inputs	Point-of-contact connection, 1 line, D-sub connector (15-pin 3-line) Serial connection, 1 line, D-sub connector (9-pin), compliant to RS-232C
Audio Output	1W (monaural) 3-1/4” (8cm) round speaker ×1
Environmental Conditions	Operating Temperature : 5°C – 35°C (41°F – 95°F) Operating humidity : 20% – 80% (non-condensing)
Power Requirements	AC120V, 50Hz/60Hz [BT-H1700BP], AC220V, 50Hz/60Hz [BT-H1700BMC]
Power Consumption	1.56A/0.9A (including input card)
Dimensions (W × H × D)	39.5cm(15-5/8”) × 33.4cm(13-1/4”) × 46.7cm(18-3/8”) (not including wide mask and input card)
Mass	23.7 kg (not including wide mask and input card)
Accessory	AC power cord (2.5 m) x1 Power cord holder x 1 (case and cover) Screws x 2 (Power cord holder) Wide Mask x 1 Screws x 4 (Wide Mask)

NOTE : Design and specifications subject to change without notice.

SAFETY PRECAUTIONS

GENERAL GUIDELINES

1. When servicing, observe the original lead dress. If a short circuit is found, replace all parts, which have been over-heated or damaged by the short circuit.
2. After servicing, see to it that all the protective devices such as insulation barriers, insulation papers shields are properly installed.
3. After servicing, make the following leakage current checks to prevent the customer from being exposed to shock hazards.

LEAKAGE CURRENT COLD CHECK

1. Unplug the AC cord and connect a jumper between the two prongs on the plug.
2. Measure the resistance value, with an ohm meter, between the jumpered AC plug and each exposed metallic cabinet part on the equipment such as screwheads, connectors, control shafts, etc. The resistance value must be more than 5MΩ.

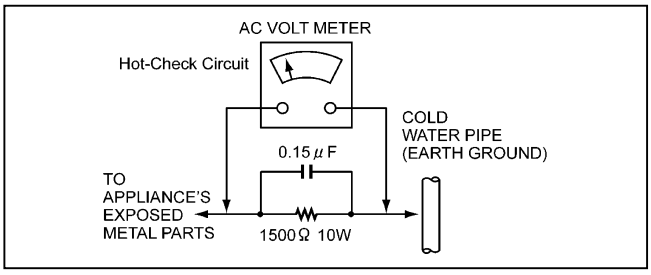

Figure1

LEAKAGE CURRENT HOT CHECK (See Figure 1)

1. Plug the AC cord directly into the AC outlet.
   Do not use an isolation transformer for this check.
2. Connect a 1.5KΩ, 10W resistor, in parallel with a 0.15μ F capacitor, between each exposed metallic part on the set an a good earth ground such as a water pipe, as shown in Figure1.
3. Use an AC voltmeter, with 1000 ohms/volt or more sensitivity, to measure the potential across the resistor.
4. Check each exposed metallic part, and measure the voltage at each point.
5. Reverse the AC plug in the AC outlet repeat each of the above measurements.
6. The potential at any point should not exceed 0.15 volts RMS. A leakage current tester (Simpson Model 229 equivalent) may be used to make the hot checks, leakage current must not exceed 0.1 milliamp. In case a measurement is outside of the limits specified, there is a possibility of a shock hazard, and the equipment should be repaired and rechecked before it is returned to the customer.

ABOUT LEAD FREE SOLDER (PbF)

Distinction of Pbf PCB:
PCBs (manufactured) using lead free solder will have a PbF stamp on the PCB.
Caution:
1. Pb free solder has a higher melting point than standard solder; Typically the melting point is 50–70˚F (30-40˚C) higher. Please use a high temperature soldering iron. In case of the soldering iron with temperature control, please set it to 700±20˚F (370±10˚C).
2. Pb free solder will tend to splash when heated too high (about 1100˚F/600˚C).

ELECTROSTATICALLY SENSITIVE (ES) DEVICES

Some semiconductor (solid state) devices can be damaged easily by static electricity. Such components commonly are called Electrostatically sensitive (ED) Devices. Examples of typical ES devices are integrated circuits and some field-effect transistors and semiconductor "chip" components. The following techniques should be used to help reduce the incidence of component damage caused by static electricity.
1. Immediately before handling any semiconductor component or semiconductor-equipped assembly, drain off any electrostatic charge on your body by touching a known earth ground.
   Alternatively, obtain and wear a commercially available discharging wrist trap device, which should be removed for potential shock reasons prior to applying power to the unit under test.
2. After removing an electrical assembly equipped with ES devices, place the assembly on a conductive surface such as aluminum foil, to prevent electrostatic charge buildup or exposure of the assembly.
3. Use only a grounded tip soldering iron to solder or unsolder ES devices.
4. Use only an anti-static solder removal device classified as "anti-static" can generate electrical charges sufficient to damage ES devices.
5. Do not use freon-propelled chemicals. These can generate electrical charges sufficient to damage ES devices.
6. Do not remove a replacement ES device from its protective package until immediately before you are ready to install it.
   (most replacement ES devices are package with leads electrically shorted together by conductive foam, aluminum foil or comparable conductive material).
7. Immediately before removing the protective material from the leads of a replacement ES device, touch the protective material to the chassis or circuit assembly into which the device will be installed.
   CAUTION: Be sure no power is applied to the chassis or circuit, and observe all other safety precautions.
8. Minimize bodily motions when handling unpackaged replacement ES devices. (Otherwise hamless motion such as the brushing together of your clothes fabric or the lifting of your foot from a carpeted floor can generate static electricity sufficient to damage an ES device).

X-RADIATION

WARNING
1. The potential source of X-radiation in EVF sets is the High Voltage section and the picture tube.
2. When using a picture tube test jig for service, ensure that jig is capable of handling 10kV without causing X-Radiation.

Note: It is important to use an accurate periodically calibrated high voltage meter.

3. Measure the High Voltage. The meter (electric type) reading should indicate 2.5kV, ±0.15kV. If the meter indication is out of tolerance, immediate service and correction is required to prevent the possibility of premature component failure. To prevent an X-Radiation possibility, it is essential to use the specified picture tube.

Panasonic

FCD0402BTKK89B

SECTION 2

ADJUSTMENT & TROUBLESHOOTING

CONTENTS

1.1 ADJUSTMENT PRECUTION ELE-1
1.2 SETTINGS REQUIRED FOR ADJUSTMENTS ELE-1
1.3 SETTING ITEMS ELE-1
1.4 MEASURING INSTRUMENTS AND FIXTURES ELE-2
1.5 FOCUS AND SCREEN ADJUSTMENT HOLES ELE-2
1.6 TIMING CHART OF SIGNALS REQUIRED FOR ADJUSTMENTS ELE-3
1.7 ADJUSTMENT LOCATIONS ELE-4
1.8 BASIC OPERATIONS OF SERVICE MENU ELE-5
1.8.1 SERVICE MENU ITEMS ELE-5
1.8.2 BASIC OPERATIONS IN THE SERVICE MENU ELE-5
1.8.3 SERVICE MENU FLOW CHART ELE-7
1.9 INITIAL SETTING VALUE OF SERVICE MENU ELE-9
1.10 ADJUSTMENT PROCEDURES ELE-31
1.10.1 SCREEN VOLTAGE COARSE ADJUSTMENT ELE-31
1.10.2 HIGH-VOLTAGE COARSE ADJUSTMENT ELE-31
1.10.3 X-RAY PROTECTOR ADJUSTMENT/CHECK ELE-32
1.10.4 HIGH-VOLTAGE ADJUSTMENT ELE-33
1.10.5 FOCUS ADJUSTMENT ELE-33
1.10.6 IMAGE ROTATION ADJUSTMENT ELE-34
1.10.7 CONVERGENCE ADJUSTMENT ELE-35
1.10.8 CONTRAST ADJUSTMENTS ELE-36
1.10.9 CHROMA/PHASE ADJUSTMENTS ELE-40
1.10.10 DEFLECTION SYSTEM ADJUSTMENTS ELE-43
1.10.11 WHITE BALANCE ADJUSTMENTS ELE-53
1.10.12 BRIGHTNESS ADJUSTMENTS ELE-57
2.1 SELF DIAGNOSIS ELE-61
2.1.1 DISPLAYING THE SELF DIAGNOSIS INDICATIONS ELE-61
2.1.2 LED INDICATION ELE-61
2.1.3 ON-SCREEN DISPLAY (SELF DIAGNOSIS DISPLAY MODE) ELE-62

ADJUSTMENT

1.1 ADJUSTMENT PRECUTION

(1) Make sure that connection is correctly mode AC to AC power souce.
(2) Warm run the unit and measuring tools sufficiently (at least 30 minutes).
(3) Perform all adjustments based on the initial values. There is no problem if the result of an adjustment performed by observing the screen is different from the initial value.
(4) Never attempt to turn on potentiometers or other controls that are not explicitly mentioned in the adjustment procedures.

NOTE:
When using the BT-YA701P (Video Input Card) in an adjustment, be sure to check the output waveforms from the video input card in advance.

1.2 SETTINGS REQUIRED FOR ADJUSTMENTS

For the functions other than those that should be set before each adjustment, reset them to the initial values according to the table on page DIS-6 before proceeding to the adjustment.
Correct adjustments will not be possible unless the values of the functions are reset to the initial values.

1.3 SETTING ITEMS

Begin adjustments with the primary items and then proceed to the secondary items, (1) to (3).

■ PRIMARY ADJUSTMENT ITEMS

- Screen voltage coarse adjustment
- High-voltage coarse adjustment
- X-ray protector adjustment/check
- High-voltage adjustment
- Focus adjustment
- Image rotation adjustment
- Convergence adjustment

■ SECONDARY ADJUSTMENT ITEMS (1)

- Contrast adjustments
- Chroma/Phase adjustments

■ SECONDARY ADJUSTMENT ITEMS (2)

- Deflection system adjustments
  (Overscan, underscan, aspect mode)

■ SECONDARY ADJUSTMENT ITEMS (3)

- White balance adjustments
- Brightness adjustments
  (Overscan, underscan, aspect mode)

1.4 MEASURING INSTRUMENTS AND FIXTURES

(1) DC voltmeter (or digital voltmeter)
(2) Oscilloscope
(3) Color analyzer (colour temperature meter)
(4) High-voltage voltmeter
(5) Signal generator (Should be compatible with the following signal specifications.)
(6) Scale (made of non-metallic material)
(7) BT-YA701P (Video Input Card)
(8) BT-YA702P (Component/RGB Input Card)

Fromats of Signal Used in Adjustments	Types of Signals Used in Adjustments
• DTV format component signals (480/60i, 480/60p, 576/50i, 576/50p, 720/50p, 720/60p, 1080/24psF, 1080/50i, 1080/60i) • NTSC signals (Composite, Y/C) • PAL signals (Composite, Y/C)	• Color bar signal • Size adjustment signal • All white signal • All black signal • Mono-scope signal • Gray scale signal • 10-step gray scale signal • Crosshatch signal • Crosshatch signal with circle pattern

1.5 FOCUS AND SCREEN ADJUSTMENT HOLES

The rear panel has the adjustment holes for use in adjusting the focusing and screen.

CAUTION :

- Be sure to use screwdrivers made of non-metallic materials for the following adjustments. If a metallic screwdriver is used, short-circuiting may damage parts of the unit, including the high-voltage parts.

1.6 TIMING CHART OF SIGNALS REQUIRED FOR ADJUSTMENTS

Generate the signals required for adjustments with a programmable signal generator by referring to the following figure.

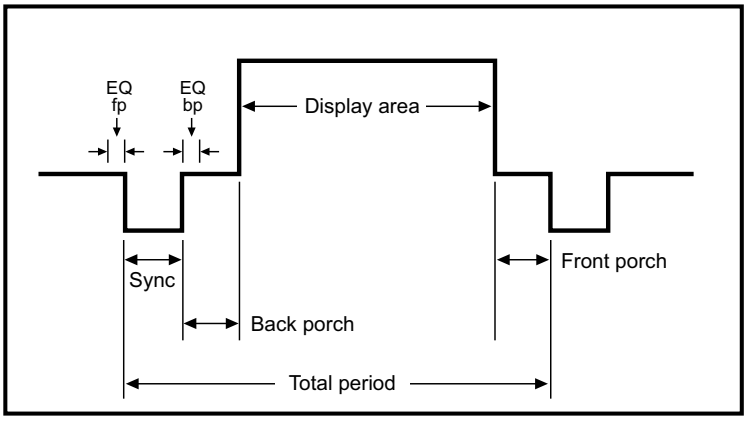

Signal	NTSC(14.3)	PAL	480/60i	576/50i	480/60p	576/50p	720/50p	720/60p	1080/24psF	1080/50i	1080/60i
Resolution(Horizontal)	768	624	720	720	720	720	1280	1280	1920	1920	1920
Resolution(Vertical)	243	287	244	287	483	576	720	720	540	540	540
Horizontal frequency(kHz)	15.73	15.625	15.73	15.625	31.469	31.25	37.50	44.955	27	28.125	33.75
Vertical frequency(Hz)	29.97i	25i	30i	25i	60p	50p	50p	60p	24psF(48i)	50i	30i
CS & V		RGB	RGB	RGB	RGB	RGB	RGB	RGB	RGB	RGB	RGB
CS	-1	-1	-1	-1	-1	-1	-1	-1	-1	-1	-1
HS	-1	-1	-1	-1	-1	-1	-1	-1	-1	-1	-1
VS	-1	-1	-1	-1	-1	-1	-1	-1	-1	-1	-1
Dot clock(MHz)	14.318	12	13.5	13.5	27	12	74.25	74.25	74.25	74.25	74.25
H period	910	768	858	864	858	864	1980	1650	2750	2640	2200
H sync	68	56	63	63	63	63	40	40	44/44	44/44	44/44
H back p.	58	70	59	68	59	69	260	260	144/188	144/188	144/188
H disp	768	624	720	720	720	720	1280	1280	1920	1920	1920
V period	263	312	263	312	525	625	750	750	562	562	562
V sync	3	3	3	3	6	5	5	5	5	5	5
V back p.	14	19	13	19	30	39	25	20	15	15	15
V disp	243	287	243	287	483	576	750	720	540	540	540
Equivalent pulse(fp/bp)	3H/3H	3H/3H	3H/3H	3H/3H	0H/0H	0H/0H	0H/0H	0H/0H	0H/0H	0H/0H	0H/0H

1.7 ADJUSTMENT LOCATIONS

S. CORRECTION PWB (SOLDER SIDE)

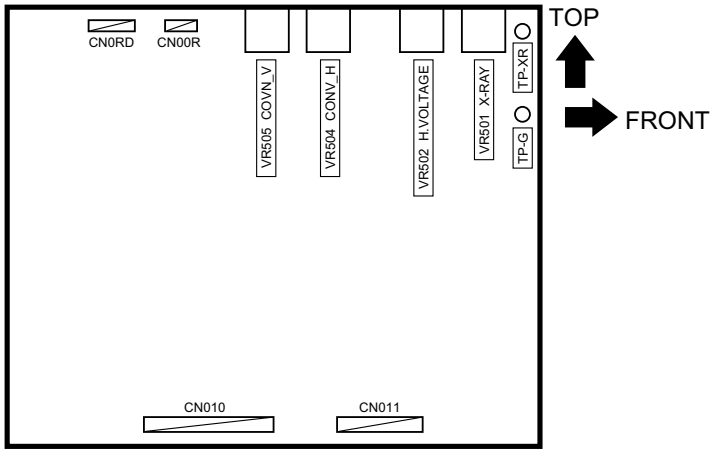

CRT SOCKET PWB (SOLDER SIDE)

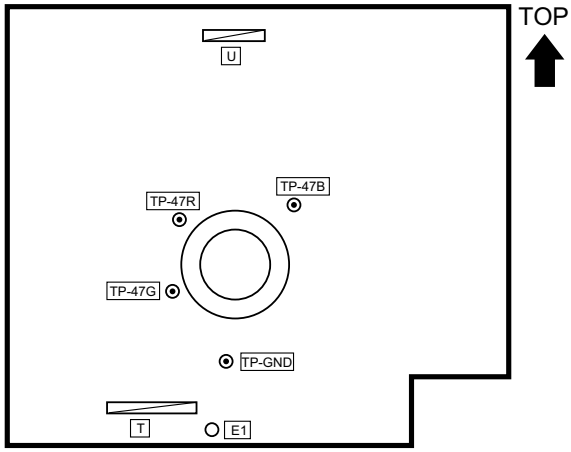

MAIN PWB

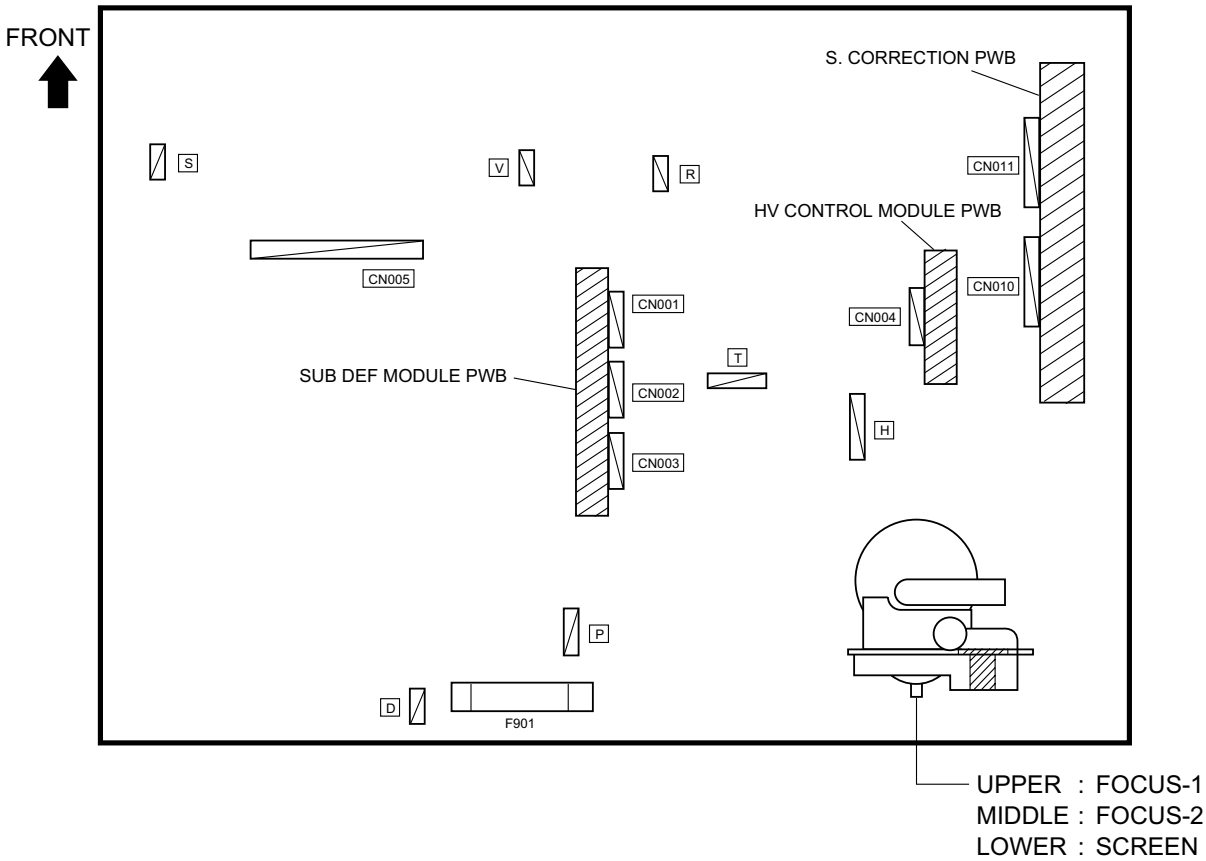

1.8 BASIC OPERATIONS OF SERVICE MENU

1.8.1 SERVICE MENU ITEMS

The service menu is roughly classified according to setup and adjustments, and is divided into the following items. Do not alter the values of unnecessary items.

SIGNAL BLOCK	Adjustments of the contrast, brightness, chroma and phase.
WHITE BALANCE BLOCK	Adjustments of the white balance.
DEFLECTION BLOCK	Adjustments of the deflection circuitry.
CPU BLOCK	Setting of the entire system by means of the control values of the microcomputer. (This block is usually not adjusted in servicing. Do not touch it except for adjustment items CC41 and CE05 to CE24.)
DIAGNOSIS	Display of the results of self diagnosis.
UPC1884 ADJ.	Display of the status of UPC1884 which is the DEF processor IC. (Do not adjust this item because it is not required for servicing.)
TA1276 ADJ.	Display of the status of TA1276 which is the RGB processor IC. (Do not adjust this item because it is not required for servicing.)
HOUR METER	Display of the hour meter count.
UPDATE CPU PROGRAM	Display of the software version.
E2PROM VERSION	Display of the E2PROM version. (Do not adjust this item because it is not required for servicing.)
FPGA VERSION	Display of the HDSDI FPGA version. (Do not adjust this item because it is not required for servicing.)
INITIALIZE EEPROM	Initialization of the user-setting menu. (Do not adjust this item because it is not required for servicing.)

1.8.2 BASIC OPERATIONS IN THE SERVICE MENU

1. Entering the Service Menu

Use the front panel keys to display the Service Menu (Fig. 1).

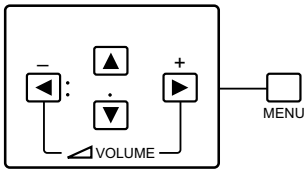

Fig. 1 FRONT PANEL KEYS

(1) While holding the ▼ key, press the **[MENU]** key.
The "⚠" mark appears at the center of the screen (Fig. 2).

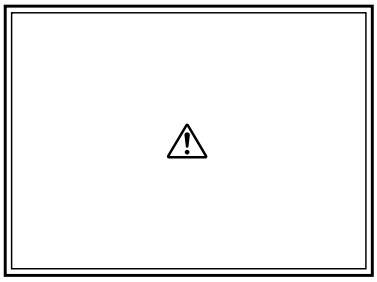

Fig. 2 WRNING MARK

(2) Before the "⚠" mark disappears (within 5 seconds after it appears), hold the ▼ key and press the **VOL-** (◀) key.

Warning message "**Please don't touch!**" appears on the screen (Fig. 3).

Fig. 3 WARNING MESSAGE DISPLAY

(3) Before the warning message disappears (within 5 seconds after it appears), press the **VOL+** (▶) key.

The service menu items appears on the display (Fig. 4).

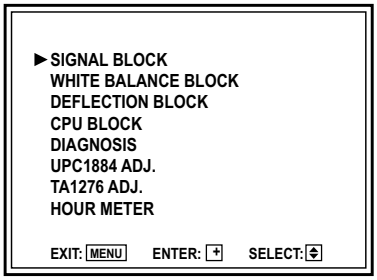

Fig. 4 SERVICE MENU

2. Setting the Service Menu items

(1) With the Service Menu displayed, press the ▼ key to select the item to be adjusted, then press the **VOL+** (▶) key to enter the submenu for the item.

```
< SIGNAL BLOCK >
►SA : VIDEO  -NTSC
 SB : Y/C    -NTSC
 SC : VIDEO  -PAL
 SD : YC     -PAL
 SE : COMP.  -480/60i
 SF : COMP.  -576/50i
 SG : COMP.  -480/60p
 SH : COMP.  -576/50p

EXIT: MENU   ENTER: +   SELECT: ⇕
```

SUBMENU

(2) Press the ▼ key to select the item to be adjusted, then press the **VOL+** (▶) key to enter the item.

```
XXXXX X
XXXXX
XXXX
XXXX
XXXX
XXX

S (A01)          * * *
```

ADJUSTMENT ITEM DISPLAY

(3) Set the adjustment item by varying it with the **VOL-** (◀) and **VOL+** (▶) keys.

```
XXXXX X
XXXXX
XXXX
XXXX
XXXX
XXX

S (A01)          * * *
```

ADJUSTMENT ITEM **ADJUSTMENT VALUE**

3. Exiting from the Service Menu

(1) After completing the adjustment of an item, press the **[MENU]** key to return to the submenu.

(2) Press the **[MENU]** key again to return to the Service Menu.

(3) Press the **[MENU]** key again to return to the normal screen.

1.8.3 SERVICE MENU FLOW CHART

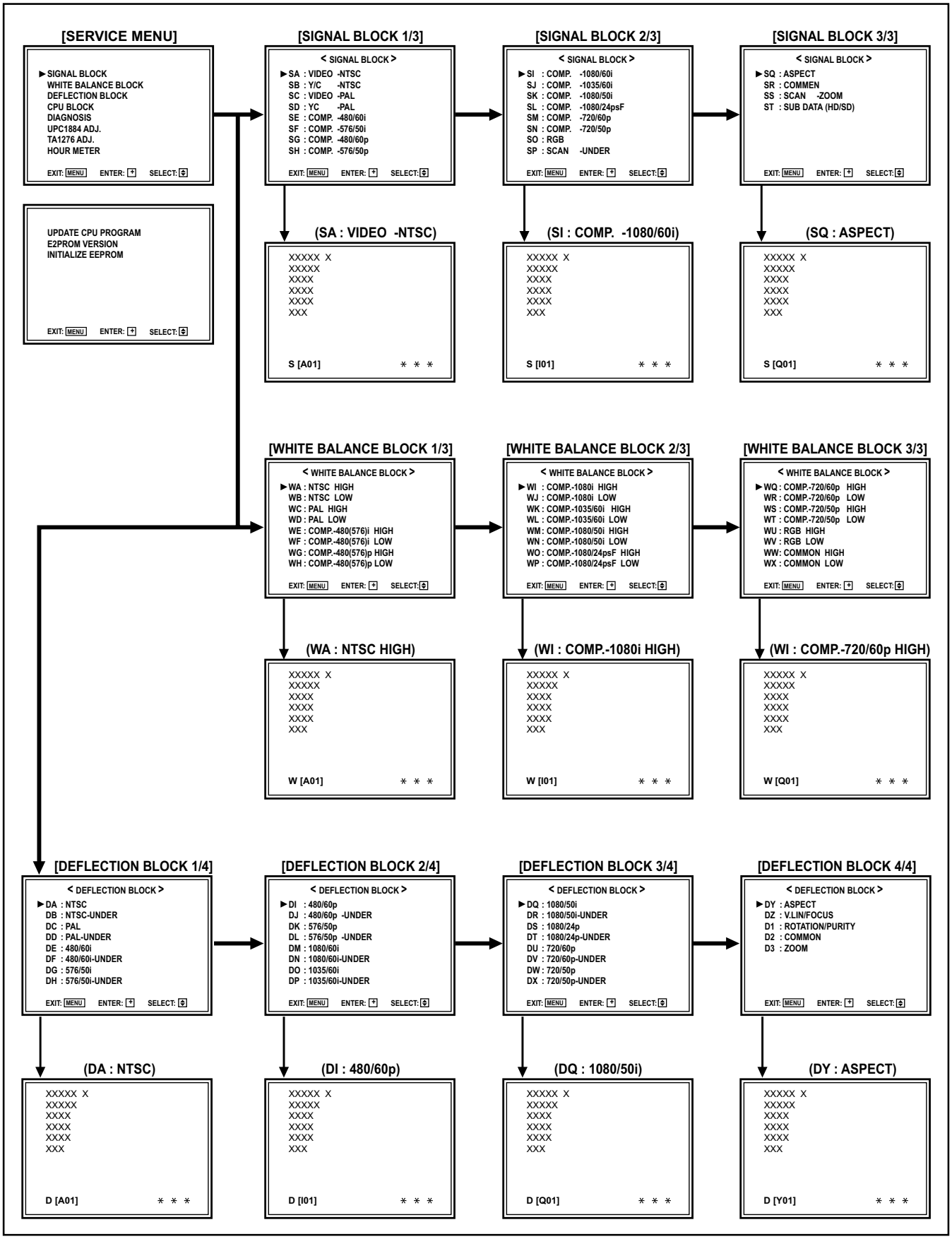

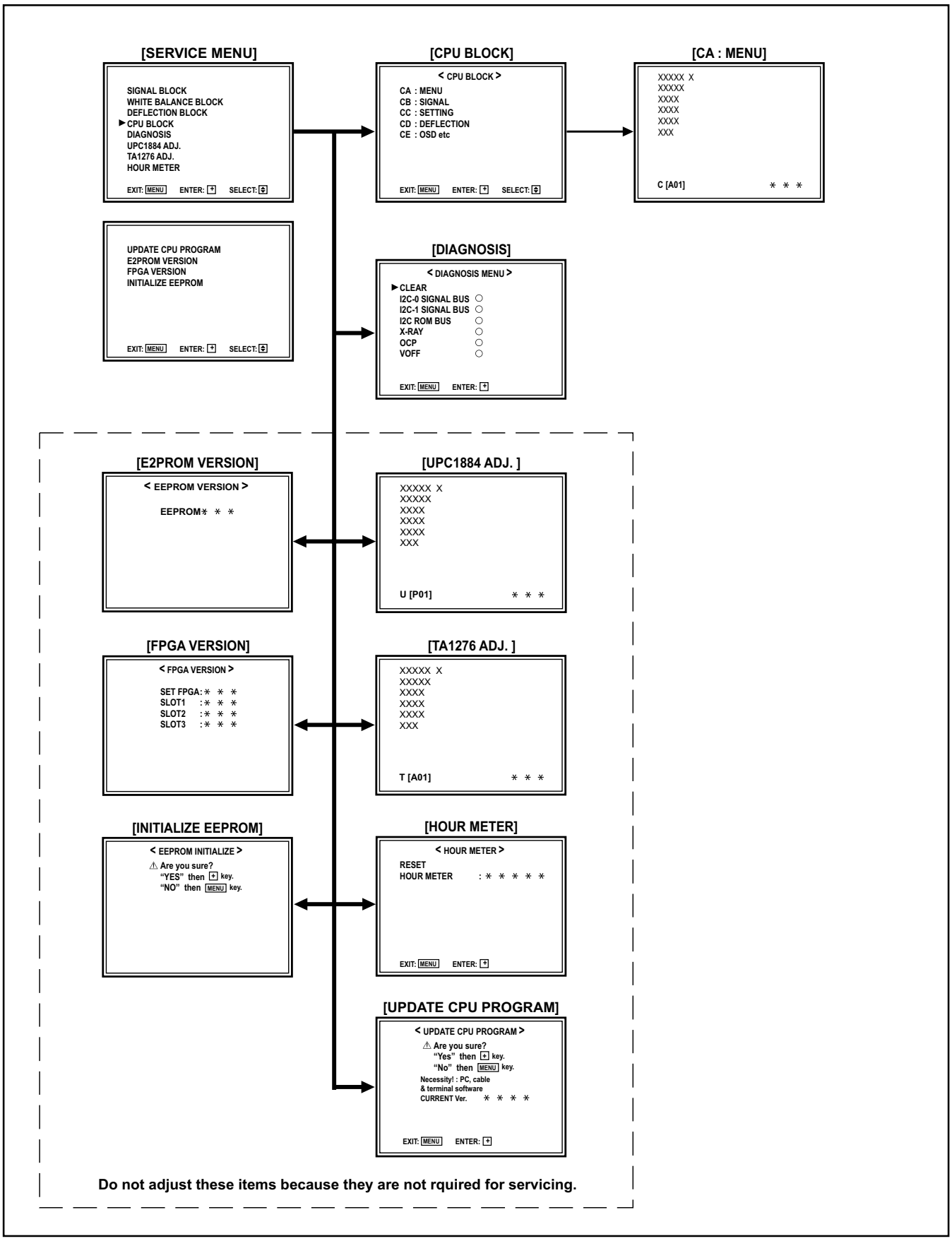
[SERVICE MENU]
SIGNAL BLOCK
WHITE BALANCE BLOCK
DEFLECTION BLOCK
►CPU BLOCK
DIAGNOSIS
UPC1884 ADJ.
TA1276 ADJ.
HOUR METER
EXIT: MENU ENTER: SELECT:
[CPU BLOCK]
< CPU BLOCK >
CA : MENU
CB : SIGNAL
CC : SETTING
CD : DEFLECTION
CE : OSD etc
EXIT: MENU ENTER: SELECT:
[CA : MENU]
XXXXX X
XXXXX
XXXX
XXXX
XXXX
XXX
C [A01] * * *
UPDATE CPU PROGRAM
E2PROM VERSION
FPGA VERSION
INITIALIZE EEPROM
EXIT: MENU ENTER: SELECT:
[DIAGNOSIS]
< DIAGNOSIS MENU >
►CLEAR
I2C-0 SIGNAL BUS
I2C-1 SIGNAL BUS
I2C ROM BUS
X-RAY
OCP
VOFF
EXIT: MENU ENTER:
[E2PROM VERSION]
< EEPROM VERSION >
EEPROM * * *
[UPC1884 ADJ.]
XXXXX X
XXXXX
XXXX
XXXX
XXXX
XXX
U [P01] * * *
[FPGA VERSION]
< FPGA VERSION >
SET FPGA: * * *
SLOT1 : * * *
SLOT2 : * * *
SLOT3 : * * *
[TA1276 ADJ.]
XXXXX X
XXXXX
XXXX
XXXX
XXXX
XXX
T [A01] * * *
[INITIALIZE EEPROM]
< EEPROM INITIALIZE >
⚠ Are you sure?
"YES" then key.
"NO" then MENU key.
[HOUR METER]
< HOUR METER >
RESET
HOUR METER : * * * * *
EXIT: MENU ENTER:
[UPDATE CPU PROGRAM]
< UPDATE CPU PROGRAM >
⚠ Are you sure?
"Yes" then key.
"No" then MENU key.
Necessity! : PC, cable
& terminal software
CURRENT Ver. * * * *
EXIT: MENU ENTER:
Do not adjust these items because they are not rquired for servicing.

1.9 INITIAL SETTING VALUE OF SERVICE MENU

Note that the following values other than the fixed values should simply be used as references during adjustments. Their correct values may be variable depending on individual units.

[SIGNAL BLOCK]

No.	Setting item	Variable range	Initial setting value
SA [VIDEO NTSC]			
S[A01]	CONTRAST	-064 ~ +063	+018
S[A02]	BRIGHT HIGH	-128 ~ +127	000
S[A03]	CHROMA	-064 ~ +063	000
S[A04]	PHASE	-064 ~ +063	000
S[A05]	APERTURE	-064 ~ +063	000
S[A06]	BRIGHT LOW	-128 ~ +127	000
S[A07]	Y DL	000/001	000 (Fixed value)
S[A08]	R-Y PHASE	000 ~ 003	000 (Fixed value)
S[A09]	R/B GAIN	000 ~ 003	002 (Fixed value)
S[A10]	G-Y PHASE	000 ~ 003	001 (Fixed value)
S[A11]	G/B GAIN	000 ~ 003	003 (Fixed value)
SB [Y/C NTSC]			
S[B01]	CONTRAST	-064 ~ +063	+018
S[B02]	BRIGHT HIGH	-128 ~ +127	000
S[B03]	CHROMA	-064 ~ +063	000
S[B04]	PHASE	-064 ~ +063	000
S[B05]	APERTURE	-064 ~ +063	000
S[B06]	BRIGHT LOW	-128 ~ +127	000
S[B07]	Y DL	000/001	000 (Fixed value)
S[B08]	R-Y PHASE	000 ~ 003	000 (Fixed value)
S[B09]	R/B GAIN	000 ~ 003	002 (Fixed value)
S[B10]	G-Y PHASE	000 ~ 003	001 (Fixed value)
S[B11]	G/B GAIN	000 ~ 003	003 (Fixed value)
SC [VIDEO PAL]			
S[C01]	CONTRAST	-064 ~ +063	+018
S[C02]	BRIGHT HIGH	-128 ~ +127	000
S[C03]	CHROMA	-064 ~ +063	000
S[C04]	PHASE	-064 ~ +063	000
S[C05]	APERTURE	-064 ~ +063	000
S[C06]	BRIGHT LOW	-128 ~ +127	000
S[C07]	Y DL	000/001	000 (Fixed value)
S[C08]	R-Y PHASE	000 ~ 003	000 (Fixed value)
S[C09]	R/B GAIN	000 ~ 003	002 (Fixed value)
S[C10]	G-Y PHASE	000 ~ 003	002 (Fixed value)
S[C11]	G/B GAIN	000 ~ 003	003 (Fixed value)
SD [YC PAL]			
S[D01]	CONTRAST	-064 ~ +063	+018
S[D02]	BRIGHT HIGH	-128 ~ +127	000
S[D03]	CHROMA	-064 ~ +063	000

No.	Setting item	Variable range	Initial setting value
S[D04]	PHASE	-064 ~ +063	000
S[D05]	APERTURE	-064 ~ +063	000
S[D06]	BRIGHT LOW	-128 ~ +127	000
S[D07]	Y DL	000/001	000 (Fixed value)
S[D08]	R-Y PHASE	000 ~ 003	000 (Fixed value)
S[D09]	R/B GAIN	000 ~ 003	002 (Fixed value)
S[D10]	G-Y PHASE	000 ~ 003	002 (Fixed value)
S[D11]	G/B GAIN	000 ~ 003	003 (Fixed value)
SE [COMP. 480/60i]			
S[E01]	CONTRAST	-064 ~ +063	+018
S[E02]	BRIGHT HIGH	-128 ~ +127	000
S[E03]	CHROMA	-064 ~ +063	000
S[E04]	PHASE	-064 ~ +063	000
S[E05]	APERTURE	-064 ~ +063	000
S[E06]	BRIGHT LOW	-128 ~ +127	000
S[E07]	Y DL	000/001	000 (Fixed value)
S[E08]	R-Y PHASE	000 ~ 003	000 (Fixed value)
S[E09]	R/B GAIN	000 ~ 003	002 (Fixed value)
S[E10]	G-Y PHASE	000 ~ 003	002 (Fixed value)
S[E11]	G/B GAIN	000 ~ 003	003 (Fixed value)
SF [COMP. 576/50i]			
S[F01]	CONTRAST	-064 ~ +063	+018
S[F02]	BRIGHT HIGH	-128 ~ +127	000
S[F03]	CHROMA	-064 ~ +063	000
S[F04]	PHASE	-064 ~ +063	000
S[F05]	APERTURE	-064 ~ +063	000
S[F06]	BRIGHT LOW	-128 ~ +127	000
S[F07]	Y DL	000/001	000 (Fixed value)
S[F08]	R-Y PHASE	000 ~ 003	000 (Fixed value)
S[F09]	R/B GAIN	000 ~ 003	002 (Fixed value)
S[F10]	G-Y PHASE	000 ~ 003	002 (Fixed value)
S[F11]	G/B GAIN	000 ~ 003	003 (Fixed value)
SG [COMP. 480/60p]			
S[G01]	CONTRAST	-064 ~ +063	+018
S[G02]	BRIGHT HIGH	-128 ~ +127	000
S[G03]	CHROMA	-064 ~ +063	000
S[G04]	PHASE	-064 ~ +063	000
S[G05]	APERTURE	-064 ~ +063	000
S[G06]	BRIGHT LOW	-128 ~ +127	000
S[G07]	Y DL	000/001	000 (Fixed value)
S[G08]	R-Y PHASE	000 ~ 003	000 (Fixed value)
S[G09]	R/B GAIN	000 ~ 003	002 (Fixed value)
S[G10]	G-Y PHASE	000 ~ 003	002 (Fixed value)
S[G11]	G/B GAIN	000 ~ 003	003 (Fixed value)

No.	Setting item	Variable range	Initial setting value
SH [COMP. 576/50p]			
S[H01]	CONTRAST	-064 ~ +063	+018
S[H02]	BRIGHT HIGH	-128 ~ +127	000
S[H03]	CHROMA	-064 ~ +063	000
S[H04]	PHASE	-064 ~ +063	000
S[H05]	APERTURE	-064 ~ +063	000
S[H06]	BRIGHT LOW	-128 ~ +127	000
S[H07]	Y DL	000/001	000 (Fixed value)
S[H08]	R-Y PHASE	000 ~ 003	000 (Fixed value)
S[H09]	R/B GAIN	000 ~ 003	002 (Fixed value)
S[H10]	G-Y PHASE	000 ~ 003	002 (Fixed value)
S[H11]	G/B GAIN	000 ~ 003	003 (Fixed value)
SI [COMP. 1080/60i]			
S[I01]	CONTRAST	-064 ~ +063	000
S[I02]	BRIGHT HIGH	-128 ~ +127	000
S[I03]	CHROMA	-064 ~ +063	000
S[I04]	PHASE	-064 ~ +063	000
S[I05]	APERTURE	-064 ~ +063	000
S[I06]	BRIGHT LOW	-128 ~ +127	000
S[I07]	Y DL	000/001	000 (Fixed value)
S[I08]	R-Y PHASE	000 ~ 003	000 (Fixed value)
S[I09]	R/B GAIN	000 ~ 003	003 (Fixed value)
S[I10]	G-Y PHASE	000 ~ 003	002 (Fixed value)
S[I11]	G/B GAIN	000 ~ 003	000 (Fixed value)
SJ [COMP. 1035/60i]			
S[J01]	CONTRAST	-064 ~ +063	000
S[J02]	BRIGHT HIGH	-128 ~ +127	000
S[J03]	CHROMA	-064 ~ +063	000
S[J04]	PHASE	-064 ~ +063	000
S[J05]	APERTURE	-064 ~ +063	000
S[J06]	BRIGHT LOW	-128 ~ +127	000
S[J07]	Y DL	000/001	000 (Fixed value)
S[J08]	R-Y PHASE	000 ~ 003	000 (Fixed value)
S[J09]	R/B GAIN	000 ~ 003	003 (Fixed value)
S[J10]	G-Y PHASE	000 ~ 003	002 (Fixed value)
S[J11]	G/B GAIN	000 ~ 003	000 (Fixed value)
SK [COMP. 1080/50i]			
S[K01]	CONTRAST	-064 ~ +063	+006
S[K02]	BRIGHT HIGH	-128 ~ +127	000
S[K03]	CHROMA	-064 ~ +063	000
S[K04]	PHASE	-064 ~ +063	000
S[K05]	APERTURE	-064 ~ +063	000
S[K06]	BRIGHT LOW	-128 ~ +127	000

No.	Setting item	Variable range	Initial setting value
S[K07]	Y DL	000/001	000 (Fixed value)
S[K08]	R-Y PHASE	000 ~ 003	000 (Fixed value)
S[K09]	R/B GAIN	000 ~ 003	003 (Fixed value)
S[K10]	G-Y PHASE	000 ~ 003	002 (Fixed value)
S[K11]	G/B GAIN	000 ~ 003	000 (Fixed value)
SL [COMP. 1080/24psF]			
S[L01]	CONTRAST	-064 ~ +063	+009
S[L02]	BRIGHT HIGH	-128 ~ +127	000
S[L03]	CHROMA	-064 ~ +063	000
S[L04]	PHASE	-064 ~ +063	000
S[L05]	APERTURE	-064 ~ +063	000
S[L06]	BRIGHT LOW	-128 ~ +127	000
S[L07]	Y DL	000/001	000 (Fixed value)
S[L08]	R-Y PHASE	000 ~ 003	000 (Fixed value)
S[L09]	R/B GAIN	000 ~ 003	003 (Fixed value)
S[L10]	G-Y PHASE	000 ~ 003	002 (Fixed value)
S[L11]	G/B GAIN	000 ~ 003	000 (Fixed value)
SM [COMP. 720/60p]			
S[M01]	CONTRAST	-064 ~ +063	+002
S[M02]	BRIGHT HIGH	-128 ~ +127	000
S[M03]	CHROMA	-064 ~ +063	000
S[M04]	PHASE	-064 ~ +063	000
S[M05]	APERTURE	-064 ~ +063	000
S[M06]	BRIGHT LOW	-128 ~ +127	000
S[M07]	Y DL	000/001	000 (Fixed value)
S[M08]	R-Y PHASE	000 ~ 003	000 (Fixed value)
S[M09]	R/B GAIN	000 ~ 003	003 (Fixed value)
S[M10]	G-Y PHASE	000 ~ 003	002 (Fixed value)
S[M11]	G/B GAIN	000 ~ 003	000 (Fixed value)
SN [COMP. 720/50p]			
S[N01]	CONTRAST	-064 ~ +063	000
S[N02]	BRIGHT HIGH	-128 ~ +127	000
S[N03]	CHROMA	-064 ~ +063	000
S[N04]	PHASE	-064 ~ +063	000
S[N05]	APERTURE	-064 ~ +063	000
S[N06]	BRIGHT LOW	-128 ~ +127	000
S[N07]	Y DL	000/001	000 (Fixed value)
S[N08]	R-Y PHASE	000 ~ 003	000 (Fixed value)
S[N09]	R/B GAIN	000 ~ 003	003 (Fixed value)
S[N10]	G-Y PHASE	000 ~ 003	002 (Fixed value)
S[N11]	G/B GAIN	000 ~ 003	000 (Fixed value)
SO [RGB]			
S[O01]	CONTRAST	-064 ~ +063	+002

No.	Setting item	Variable range	Initial setting value
S[O02]	BRIGHT HIGH	-128 ~ +127	-070
S[O03]	BRIGHT LOW	-128 ~ +127	-070
SP [SCAN UNDER]			
S[P01]	NTSC-COMPOS. CONTRAST	-064 ~ +063	-007
S[P02]	NTSC-COMPOS. BRIGHT HIGH	-128 ~ +127	000
S[P03]	NTSC-COMPOS. BRIGHT LOW	-128 ~ +127	000
S[P04]	NTSC-Y/C CONTRAST	-064 ~ +063	-007
S[P05]	NTSC-Y/C BRIGHT HIGH	-128 ~ +127	000
S[P06]	NTSC-Y/C BRIGHT LOW	-128 ~ +127	000
S[P07]	PAL-COMPOS. CONTRAST	-064 ~ +063	-007
S[P08]	PAL-COMPOS. BRIGHT HIGH	-128 ~ +127	000
S[P09]	PAL-COMPOS. BRIGHT LOW	-128 ~ +127	000
S[P10]	PAL-Y/C CONTRAST	-064 ~ +063	-007
S[P11]	PAL-Y/C BRIGHT HIGH	-128 ~ +127	000
S[P12]	PAL-Y/C BRIGHT LOW	-128 ~ +127	000
S[P13]	480i CONTRAST	-064 ~ +063	-007
S[P14]	480i BRIGHT HIGH	-128 ~ +127	000
S[P15]	480i BRIGHT LOW	-128 ~ +127	000
S[P16]	576i CONTRAST	-064 ~ +063	-007
S[P17]	576i BRIGHT HIGH	-128 ~ +127	000
S[P18]	576i BRIGHT LOW	-128 ~ +127	000
S[P19]	480p CONTRAST	-064 ~ +063	-007
S[P20]	480p BRIGHT HIGH	-128 ~ +127	000
S[P21]	480p BRIGHT LOW	-128 ~ +127	000
S[P22]	576p CONTRAST	-064 ~ +063	-007
S[P23]	576p BRIGHT HIGH	-128 ~ +127	000
S[P24]	576p BRIGHT LOW	-128 ~ +127	000
S[P25]	1080/60i CONTRAST	-064 ~ +063	-007
S[P26]	1080/60i BRIGHT HIGH	-128 ~ +127	000
S[P27]	1080/60i BRIGHT LOW	-128 ~ +127	000
S[P28]	1035/60i CONTRAST	-064 ~ +063	-007
S[P29]	1035/60i BRIGHT HIGH	-128 ~ +127	000
S[P30]	1035/60i BRIGHT LOW	-128 ~ +127	000
S[P31]	1080/50i CONTRAST	-064 ~ +063	-007
S[P32]	1080/50i BRIGHT HIGH	-128 ~ +127	000
S[P33]	1080/50i BRIGHT LOW	-128 ~ +127	000
S[P34]	1080/24psF CONTRAST	-064 ~ +063	-007
S[P35]	1080/24psF BRIGHT HIGH	-128 ~ +127	000
S[P36]	1080/24psF BRIGHT LOW	-128 ~ +127	000
S[P37]	720/60p CONTRAST	-064 ~ +063	-007
S[P38]	720/60p BRIGHT HIGH	-128 ~ +127	000
S[P39]	720/60p BRIGHT LOW	-128 ~ +127	000
S[P40]	720/50p CONTRAST	-064 ~ +063	-007

No.	Setting item	Variable range	Initial setting value
S[P41]	720/50p BRIGHT HIGH	-128 ~ +127	000
S[P42]	720/50p BRIGHT LOW	-128 ~ +127	000
SQ [ASPECT]			
S[Q01]	NTSC-COMPOS. OVERSCAN CONTRAST	-064 ~ +063	-011
S[Q02]	NTSC-COMPOS. OVERSCAN BRIGHT HIGH	-128 ~ +127	000
S[Q03]	NTSC-COMPOS. OVERSCAN BRIGHT LOW	-128 ~ +127	000
S[Q04]	NTSC-COMPOS. UNDERSCAN CONTRAST	-064 ~ +063	-011
S[Q05]	NTSC-COMPOS. UNDERSCAN BRIGHT HIGH	-128 ~ +127	000
S[Q06]	NTSC-COMPOS. UNDERSCAN BRIGHT LOW	-128 ~ +127	000
S[Q07]	NTSC-Y/C OVERSCAN CONTRAST	-064 ~ +063	-011
S[Q08]	NTSC-Y/C OVERSCAN BRIGHT HIGH	-128 ~ +127	000
S[Q09]	NTSC-Y/C OVERSCAN BRIGHT LOW	-128 ~ +127	000
S[Q10]	NTSC-Y/C UNDERSCAN CONTRAST	-064 ~ +063	-011
S[Q11]	NTSC-Y/C UNDERSCAN BRIGHT HIGH	-128 ~ +127	000
S[Q12]	NTSC-Y/C UNDERSCAN BRIGHT LOW	-128 ~ +127	000
S[Q13]	PAL-COMPOS. OVERSCAN CONTRAST	-064 ~ +063	-011
S[Q14]	PAL-COMPOS. OVERSCAN BRIGHT HIGH	-128 ~ +127	000
S[Q15]	PAL-COMPOS. OVERSCAN BRIGHT LOW	-128 ~ +127	000
S[Q16]	PAL-COMPOS. UNDERSCAN CONTRAST	-064 ~ +063	-011
S[Q17]	PAL-COMPOS. UNDERSCAN BRIGHT HIGH	-128 ~ +127	000
S[Q18]	PAL-COMPOS. UNDERSCAN BRIGHT LOW	-128 ~ +127	000
S[Q19]	PAL-Y/C OVERSCAN CONTRAST	-064 ~ +063	-011
S[Q20]	PAL-Y/C OVERSCAN BRIGHT HIGH	-128 ~ +127	000
S[Q21]	PAL-Y/C OVERSCAN BRIGHT LOW	-128 ~ +127	000
S[Q22]	PAL-Y/C UNDERSCAN CONTRAST	-064 ~ +063	-011
S[Q23]	PAL-Y/C UNDERSCAN BRIGHT HIGH	-128 ~ +127	000
S[Q24]	PAL-Y/C UNDERSCAN BRIGHT LOW	-128 ~ +127	000
S[Q25]	480i OVERSCAN CONTRAST	-064 ~ +063	-011
S[Q26]	480i OVERSCAN BRIGHT HIGH	-128 ~ +127	000
S[Q27]	480i OVERSCAN BRIGHT LOW	-128 ~ +127	000
S[Q28]	480i UNDERSCAN CONTRAST	-064 ~ +063	-011
S[Q29]	480i UNDERSCAN BRIGHT HIGH	-128 ~ +127	000
S[Q30]	480i UNDERSCAN BRIGHT LOW	-128 ~ +127	000
S[Q31]	576i OVERSCAN CONTRAST	-064 ~ +063	-011
S[Q32]	576i OVERSCAN BRIGHT HIGH	-128 ~ +127	000
S[Q33]	576i OVERSCAN BRIGHT LOW	-128 ~ +127	000
S[Q34]	576i UNDERSCAN CONTRAST	-064 ~ +063	-011
S[Q35]	576i UNDERSCAN BRIGHT HIGH	-128 ~ +127	000
S[Q36]	576i UNDERSCAN BRIGHT LOW	-128 ~ +127	000
S[Q37]	480p OVERSCAN CONTRAST	-064 ~ +063	-011
S[Q38]	480p OVERSCAN BRIGHT HIGH	-128 ~ +127	000
S[Q39]	480p OVERSCAN BRIGHT LOW	-128 ~ +127	000
S[Q40]	480p UNDERSCAN CONTRAST	-064 ~ +063	-011

No.	Setting item	Variable range	Initial setting value
S[Q41]	480p UNDERSCAN BRIGHT HIGH	-128 ~ +127	000
S[Q42]	480p UNDERSCAN BRIGHT LOW	-128 ~ +127	000
S[Q43]	576p OVERSCAN CONTRAST	-064 ~ +063	-011
S[Q44]	576p OVERSCAN BRIGHT HIGH	-128 ~ +127	000
S[Q45]	576p OVERSCAN BRIGHT LOW	-128 ~ +127	000
S[Q46]	576p UNDERSCAN CONTRAST	-064 ~ +063	-011
S[Q47]	576p UNDERSCAN BRIGHT HIGH	-128 ~ +127	000
S[Q48]	576p UNDERSCAN BRIGHT LOW	-128 ~ +127	000
SR [COMMON] **NOTE :** When the value of item SR is changed, items SA to ST should be re-adjusted.			
S[R01]	CONTRAST	000 ~ 127	066
S[R02]	BRIGHT HIGH	000 ~ 255	140
S[R03]	CHROMA	000 ~ 127	064
S[R04]	PHASE	000 ~ 127	064
S[R05]	APERTURE	000 ~ 127	025
S[R06]	BRIGHT LOW	-128 ~ +127	000
S[R07]	Y DL	000/001	000 (Fixed value)
S[R08]	R-Y PHASE	000 ~ 003	000 (Fixed value)
S[R09]	R/B GAIN	000 ~ 003	003 (Fixed value)
S[R10]	G-Y PHASE	000 ~ 003	002 (Fixed value)
S[R11]	G/B GAIN	000 ~ 003	000 (Fixed value)
SS [SCAN ZOOM]			
S[S01]	NTSC-COMPOS. ZOOMSCAN CONTRAST	-064 ~ +063	+009
S[S02]	NTSC-COMPOS. ZOOMSCAN BRIGHT HIGH	-128 ~ +127	000
S[S03]	NTSC-COMPOS. ZOOMSCAN BRIGHT LOW	-128 ~ +127	000
S[S04]	NTSC-Y/C ZOOMSCAN CONTRAST	-064 ~ +063	+009
S[S05]	NTSC-Y/C ZOOMSCAN BRIGHT HIGH	-128 ~ +127	000
S[S06]	NTSC-Y/C ZOOMSCAN BRIGHT LOW	-128 ~ +127	000
S[S07]	PAL-COMPOS. ZOOMSCAN CONTRAST	-064 ~ +063	+009
S[S08]	PAL-COMPOS. ZOOMSCAN BRIGHT HIGH	-128 ~ +127	000
S[S09]	PAL-COMPOS. ZOOMSCAN BRIGHT LOW	-128 ~ +127	000
S[S10]	PAL-Y/C ZOOMSCAN CONTRAST	-064 ~ +063	+009
S[S11]	PAL-Y/C ZOOMSCAN BRIGHT HIGH	-128 ~ +127	000
S[S12]	PAL-Y/C ZOOMSCAN BRIGHT LOW	-128 ~ +127	000
S[S13]	480i ZOOMSCAN CONTRAST	-064 ~ +063	+009
S[S14]	480i ZOOMSCAN BRIGHT HIGH	-128 ~ +127	000
S[S15]	480i ZOOMSCAN BRIGHT LOW	-128 ~ +127	000
S[S16]	576i ZOOMSCAN CONTRAST	-064 ~ +063	+009
S[S17]	576i ZOOMSCAN BRIGHT HIGH	-128 ~ +127	000
S[S18]	576i ZOOMSCAN BRIGHT LOW	-128 ~ +127	000
S[S19]	480p ZOOMSCAN CONTRAST	-064 ~ +063	+009
S[S20]	480p ZOOMSCAN BRIGHT HIGH	-128 ~ +127	000
S[S21]	480p ZOOMSCAN BRIGHT LOW	-128 ~ +127	000
S[S22]	576p ZOOMSCAN CONTRAST	-064 ~ +063	+009

No.	Setting item	Variable range	Initial setting value
S[S23]	576p ZOOMSCAN BRIGHT HIGH	-128 ~ +127	000
S[S24]	576p ZOOMSCAN BRIGHT LOW	-128 ~ +127	000
S[S25]	1080/60i ZOOMSCAN CONTRAST	-064 ~ +063	+009
S[S26]	1080/60i ZOOMSCAN BRIGHT HIGH	-128 ~ +127	000
S[S27]	1080/60i ZOOMSCAN BRIGHT LOW	-128 ~ +127	000
S[S28]	1035/60i ZOOMSCAN CONTRAST	-064 ~ +063	+009
S[S29]	1035/60i ZOOMSCAN BRIGHT HIGH	-128 ~ +127	000
S[S30]	1035/60i ZOOMSCAN BRIGHT LOW	-128 ~ +127	000
S[S31]	1080/50i ZOOMSCAN CONTRAST	-064 ~ +063	+009
S[S32]	1080/50i ZOOMSCAN BRIGHT HIGH	-128 ~ +127	000
S[S33]	1080/50i ZOOMSCAN BRIGHT LOW	-128 ~ +127	000
S[S34]	1080/24psF ZOOMSCAN CONTRAST	-064 ~ +063	+009
S[S35]	1080/24psF ZOOMSCAN BRIGHT HIGH	-128 ~ +127	000
S[S36]	1080/24psF ZOOMSCAN BRIGHT LOW	-128 ~ +127	000
S[S37]	720/60p ZOOMSCAN CONTRAST	-064 ~ +063	+007
S[S38]	720/60p ZOOMSCAN BRIGHT HIGH	-128 ~ +127	000
S[S39]	720/60p ZOOMSCAN BRIGHT LOW	-128 ~ +127	000
S[S40]	720/50p ZOOMSCAN CONTRAST	-064 ~ +063	+009
S[S41]	720/50p ZOOMSCAN BRIGHT HIGH	-128 ~ +127	000
S[S42]	720/50p ZOOMSCAN BRIGHT LOW	-128 ~ +127	000
ST [HD/SD MODE]			
S[T01]	NTSC-COMPOS. HD/SD CONTRAST	-064 ~ +063	000
S[T02]	NTSC-COMPOS. HD/SD BRIGHT HIGH	-128 ~ +127	000
S[T03]	NTSC-COMPOS. HD/SD BRIGHT LOW	-128 ~ +127	000
S[T04]	NTSC-Y/C HD/SD CONTRAST	-064 ~ +063	000
S[T05]	NTSC-Y/C HD/SD BRIGHT HIGH	-128 ~ +127	000
S[T06]	NTSC-Y/C HD/SD BRIGHT LOW	-128 ~ +127	000
S[T07]	PAL-COMPOS. HD/SD CONTRAST	-064 ~ +063	000
S[T08]	PAL-COMPOS. HD/SD BRIGHT HIGH	-128 ~ +127	000
S[T09]	PAL-COMPOS. HD/SD BRIGHT LOW	-128 ~ +127	000
S[T10]	PAL-Y/C HD/SD CONTRAST	-064 ~ +063	000
S[T11]	PAL-Y/C HD/SD BRIGHT HIGH	-128 ~ +127	000
S[T12]	PAL-Y/C HD/SD BRIGHT LOW	-128 ~ +127	000
S[T13]	480i HD/SD CONTRAST	-064 ~ +063	000
S[T14]	480i HD/SD BRIGHT HIGH	-128 ~ +127	000
S[T15]	480i HD/SD BRIGHT LOW	-128 ~ +127	000
S[T16]	576i HD/SD CONTRAST	-064 ~ +063	000
S[T17]	576i HD/SD BRIGHT HIGH	-128 ~ +127	000
S[T18]	576i HD/SD BRIGHT LOW	-128 ~ +127	000

[WHITE BALANCE BLOCK]

No.	Setting item	Variable range	Initial setting value
WA [NTSC(COMPOS.,Y/C) HIGH]			
W[A01]	DRIVE (R)	-128 ~ +127	000
W[A02]	DRIVE (G)	–	000
W[A03]	DRIVE (B)	-128 ~ +127	000
W[A04]	CUTOFF (R)	-128 ~ +127	000
W[A05]	CUTOFF (G)	-128 ~ +127	000
W[A06]	CUTOFF (B)	-128 ~ +127	000
WB [NTSC(COMPOS.,Y/C) LOW]			
W[B01]	DRIVE (R)	-128 ~ +127	000
W[B02]	DRIVE (G)	–	000
W[B03]	DRIVE (B)	-128 ~ +127	000
W[B04]	CUTOFF (R)	-128 ~ +127	000
W[B05]	CUTOFF (G)	-128 ~ +127	000
W[B06]	CUTOFF (B)	-128 ~ +127	000
WC [PAL(COMPOS.,Y/C) HIGH]			
W[C01]	DRIVE (R)	-128 ~ +127	000
W[C02]	DRIVE (G)	–	000
W[C03]	DRIVE (B)	-128 ~ +127	000
W[C04]	CUTOFF (R)	-128 ~ +127	000
W[C05]	CUTOFF (G)	-128 ~ +127	000
W[C06]	CUTOFF (B)	-128 ~ +127	000
WD [PAL(COMPOS.,Y/C) LOW]			
W[D01]	DRIVE (R)	-128 ~ +127	000
W[D02]	DRIVE (G)	–	000
W[D03]	DRIVE (B)	-128 ~ +127	000
W[D04]	CUTOFF (R)	-128 ~ +127	000
W[D05]	CUTOFF (G)	-128 ~ +127	000
W[D06]	CUTOFF (B)	-128 ~ +127	000
WE [COMP. 480(576)i HIGH]			
W[E01]	DRIVE (R)	-128 ~ +127	000
W[E02]	DRIVE (G)	–	000
W[E03]	DRIVE (B)	-128 ~ +127	000
W[E04]	CUTOFF (R)	-128 ~ +127	000
W[E05]	CUTOFF (G)	-128 ~ +127	000
W[E06]	CUTOFF (B)	-128 ~ +127	000
WF [COMP. 480(576)i LOW]			
W[F01]	DRIVE (R)	-128 ~ +127	000
W[F02]	DRIVE (G)	–	000
W[F03]	DRIVE (B)	-128 ~ +127	000
W[F04]	CUTOFF (R)	-128 ~ +127	000
W[F05]	CUTOFF (G)	-128 ~ +127	000
W[F06]	CUTOFF (B)	-128 ~ +127	000

No.	Setting item	Variable range	Initial setting value
WG [COMP. 480(576)p HIGH]			
W[G01]	DRIVE (R)	-128 ~ +127	000
W[G02]	DRIVE (G)	–	000
W[G03]	DRIVE (B)	-128 ~ +127	000
W[G04]	CUTOFF (R)	-128 ~ +127	000
W[G05]	CUTOFF (G)	-128 ~ +127	000
W[G06]	CUTOFF (B)	-128 ~ +127	000
WH [COMP. 480(576)p LOW]			
W[H01]	DRIVE (R)	-128 ~ +127	000
W[H02]	DRIVE (G)	–	000
W[H03]	DRIVE (B)	-128 ~ +127	000
W[H04]	CUTOFF (R)	-128 ~ +127	000
W[H05]	CUTOFF (G)	-128 ~ +127	000
W[H06]	CUTOFF (B)	-128 ~ +127	000
WI [COMP. 1080/60i HIGH]			
W[I01]	DRIVE (R)	-128 ~ +127	000
W[I02]	DRIVE (G)	–	000
W[I03]	DRIVE (B)	-128 ~ +127	000
W[I04]	CUTOFF (R)	-128 ~ +127	000
W[I05]	CUTOFF (G)	-128 ~ +127	000
W[I06]	CUTOFF (B)	-128 ~ +127	000
WJ [COMP. 1080/60i LOW]			
W[J01]	DRIVE (R)	-128 ~ +127	000
W[J02]	DRIVE (G)	–	000
W[J03]	DRIVE (B)	-128 ~ +127	000
W[J04]	CUTOFF (R)	-128 ~ +127	000
W[J05]	CUTOFF (G)	-128 ~ +127	000
W[J06]	CUTOFF (B)	-128 ~ +127	000
WK [COMP. 1035/60i HIGH]			
W[K01]	DRIVE (R)	-128 ~ +127	000
W[K02]	DRIVE (G)	–	000
W[K03]	DRIVE (B)	-128 ~ +127	000
W[K04]	CUTOFF (R)	-128 ~ +127	000
W[K05]	CUTOFF (G)	-128 ~ +127	000
W[K06]	CUTOFF (B)	-128 ~ +127	000
WL [COMP. 1035/60i LOW]			
W[L01]	DRIVE (R)	-128 ~ +127	000
W[L02]	DRIVE (G)	–	000
W[L03]	DRIVE (B)	-128 ~ +127	000
W[L04]	CUTOFF (R)	-128 ~ +127	000
W[L05]	CUTOFF (G)	-128 ~ +127	000
W[L06]	CUTOFF (B)	-128 ~ +127	000

No.	Setting item	Variable range	Initial setting value
WM [COMP. 1080/50i HIGH]			
W[M01]	DRIVE (R)	-128 ~ +127	000
W[M02]	DRIVE (G)	–	000
W[M03]	DRIVE (B)	-128 ~ +127	000
W[M04]	CUTOFF (R)	-128 ~ +127	000
W[M05]	CUTOFF (G)	-128 ~ +127	000
W[M06]	CUTOFF (B)	-128 ~ +127	000
WN [COMP. 1080/50i LOW]			
W[N01]	DRIVE (R)	-128 ~ +127	000
W[N02]	DRIVE (G)	–	000
W[N03]	DRIVE (B)	-128 ~ +127	000
W[N04]	CUTOFF (R)	-128 ~ +127	000
W[N05]	CUTOFF (G)	-128 ~ +127	000
W[N06]	CUTOFF (B)	-128 ~ +127	000
WO [COMP. 1080/24psF HIGH]			
W[O01]	DRIVE (R)	-128 ~ +127	000
W[O02]	DRIVE (G)	–	000
W[O03]	DRIVE (B)	-128 ~ +127	000
W[O04]	CUTOFF (R)	-128 ~ +127	000
W[O05]	CUTOFF (G)	-128 ~ +127	000
W[O06]	CUTOFF (B)	-128 ~ +127	000
WP [COMP. 1080/24psF LOW]			
W[P01]	DRIVE (R)	-128 ~ +127	000
W[P02]	DRIVE (G)	–	000
W[P03]	DRIVE (B)	-128 ~ +127	000
W[P04]	CUTOFF (R)	-128 ~ +127	000
W[P05]	CUTOFF (G)	-128 ~ +127	000
W[P06]	CUTOFF (B)	-128 ~ +127	000
WQ [COMP. 720/60p HIGH]			
W[Q01]	DRIVE (R)	-128 ~ +127	000
W[Q02]	DRIVE (G)	–	000
W[Q03]	DRIVE (B)	-128 ~ +127	000
W[Q04]	CUTOFF (R)	-128 ~ +127	000
W[Q05]	CUTOFF (G)	-128 ~ +127	000
W[Q06]	CUTOFF (B)	-128 ~ +127	000
WR [COMP. 720/60p LOW]			
W[R01]	DRIVE (R)	-128 ~ +127	000
W[R02]	DRIVE (G)	–	000
W[R03]	DRIVE (B)	-128 ~ +127	000
W[R04]	CUTOFF (R)	-128 ~ +127	000
W[R05]	CUTOFF (G)	-128 ~ +127	000
W[R06]	CUTOFF (B)	-128 ~ +127	000

No.	Setting item	Variable range	Initial setting value
WS [COMP. 720/50p HIGH]			
W[S01]	DRIVE (R)	-128 ~ +127	000
W[S02]	DRIVE (G)	–	000
W[S03]	DRIVE (B)	-128 ~ +127	000
W[S04]	CUTOFF (R)	-128 ~ +127	000
W[S05]	CUTOFF (G)	-128 ~ +127	000
W[S06]	CUTOFF (B)	-128 ~ +127	000
WT [COMP. 720/50p LOW]			
W[T01]	DRIVE (R)	-128 ~ +127	000
W[T02]	DRIVE (G)	–	000
W[T03]	DRIVE (B)	-128 ~ +127	000
W[T04]	CUTOFF (R)	-128 ~ +127	000
W[T05]	CUTOFF (G)	-128 ~ +127	000
W[T06]	CUTOFF (B)	-128 ~ +127	000
WU [RGB HIGH]			
W[U01]	DRIVE (R)	-128 ~ +127	000
W[U02]	DRIVE (G)	–	000
W[U03]	DRIVE (B)	-128 ~ +127	000
W[U04]	CUTOFF (R)	-128 ~ +127	000
W[U05]	CUTOFF (G)	-128 ~ +127	000
W[U06]	CUTOFF (B)	-128 ~ +127	000
WV [RGB LOW]			
W[V01]	DRIVE (R)	-128 ~ +127	000
W[V02]	DRIVE (G)	–	000
W[V03]	DRIVE (B)	-128 ~ +127	000
W[V04]	CUTOFF (R)	-128 ~ +127	000
W[V05]	CUTOFF (G)	-128 ~ +127	000
W[V06]	CUTOFF (B)	-128 ~ +127	000
WW [COMMON HIGH] NOTE : When the value of item WW is changed, it is necessary to readjust white balance HIGH of all signals.			
W[W01]	DRIVE (R)	000 ~ 127	070
W[W02]	DRIVE (G)	–	064
W[W03]	DRIVE (B)	000 ~ 127	060
W[W04]	CUTOFF (R)	000 ~ 255	050
W[W05]	CUTOFF (G)	000 ~ 255	050
W[W06]	CUTOFF (B)	000 ~ 255	050
WX [COMMON LOW] NOTE : When the value of item WX is changed, it is necessary to readjust white balance LOW of all signals.			
W[X01]	DRIVE (R)	000 ~ 127	080
W[X02]	DRIVE (G)	–	064
W[X03]	DRIVE (B)	000 ~ 127	044
W[X04]	CUTOFF (R)	000 ~ 255	050
W[X05]	CUTOFF (G)	000 ~ 255	050
W[X06]	CUTOFF (B)	000 ~ 255	050

[DEFLECTION BLOCK]

No.	Setting item	Variable range	Initial setting value
DA [NTSC(COMPOS.,Y/C) OVER]			
D[A01]	HORIZONTAL SIZE	-064 ~ +064	-016
D[A02]	VERTICAL SIZE	-064 ~ +064	010
D[A03]	HORIZONTAL POSITION	-064 ~ +064	+015
D[A04]	VERTICAL POSITION	-064 ~ +064	000
D[A05]	SIDE PIN DISTORTION	-032 ~ +032	+005
D[A06]	CORNER DISTORTION (W)	-032 ~ +032	000
D[A07]	CORNER DISTORTION (S)	-032 ~ +032	000
D[A08]	PARALLELOGRAM DISTORTION	-032 ~ +032	-002
D[A09]	TRAPEZOIDAL DISTORTION	-032 ~ +032	-003
D[A10]	HORIZONTAL ARC DISTORTION	-032 ~ +032	000
D[A11]	VERTICAL LINEARITY (S CORRECTION)	-016 ~ +016	-005
D[A12]	VERTICAL LINEARITY (C CORRECTION)	-016 ~ +016	-004
DB [NTSC(COMPOS.,Y/C) UNDER]			
D[B01]	HORIZONTAL SIZE	-064 ~ +064	-010
D[B02]	VERTICAL SIZE	-064 ~ +064	-025
D[B03]	HORIZONTAL POSITION	-064 ~ +064	000
D[B04]	VERTICAL POSITION	-064 ~ +064	000
D[B05]	SIDE PIN DISTORTION	-032 ~ +032	+001
D[B06]	CORNER DISTORTION (W)	-032 ~ +032	000
D[B07]	CORNER DISTORTION (S)	-032 ~ +032	000
D[B08]	PARALLELOGRAM DISTORTION	-032 ~ +032	000
D[B09]	TRAPEZOIDAL DISTORTION	-032 ~ +032	000
D[B10]	HORIZONTAL ARC DISTORTION	-032 ~ +032	000
D[B11]	VERTICAL LINEARITY (S CORRECTION)	-016 ~ +016	000
D[B12]	VERTICAL LINEARITY (C CORRECTION)	-016 ~ +016	000
DC [PAL(COMPOS.,Y/C) OVER]			
D[C01]	HORIZONTAL SIZE	-064 ~ +064	-016
D[C02]	VERTICAL SIZE	-064 ~ +064	+010
D[C03]	HORIZONTAL POSITION	-064 ~ +064	+010
D[C04]	VERTICAL POSITION	-064 ~ +064	+005
D[C05]	SIDE PIN DISTORTION	-032 ~ +032	+007
D[C06]	CORNER DISTORTION (W)	-032 ~ +032	000
D[C07]	CORNER DISTORTION (S)	-032 ~ +032	000
D[C08]	PARALLELOGRAM DISTORTION	-032 ~ +032	-001
D[C09]	TRAPEZOIDAL DISTORTION	-032 ~ +032	-005
D[C10]	HORIZONTAL ARC DISTORTION	-032 ~ +032	000
D[C11]	VERTICAL LINEARITY (S CORRECTION)	-016 ~ +016	-005
D[C12]	VERTICAL LINEARITY (C CORRECTION)	-016 ~ +016	-003
DD [PAL(COMPOS.,Y/C) UNDER]			
D[D01]	HORIZONTAL SIZE	-064 ~ +064	-010
D[D02]	VERTICAL SIZE	-064 ~ +064	-025

No.	Setting item	Variable range	Initial setting value
D[D03]	HORIZONTAL POSITION	-064 ~ +064	000
D[D04]	VERTICAL POSITION	-064 ~ +064	000
D[D05]	SIDE PIN DISTORTION	-032 ~ +032	+001
D[D06]	CORNER DISTORTION (W)	-032 ~ +032	000
D[D07]	CORNER DISTORTION (S)	-032 ~ +032	000
D[D08]	PARALLELOGRAM DISTORTION	-032 ~ +032	000
D[D09]	TRAPEZOIDAL DISTORTION	-032 ~ +032	000
D[D10]	HORIZONTAL ARC DISTORTION	-032 ~ +032	000
D[D11]	VERTICAL LINEARITY (S CORRECTION)	-016 ~ +016	000
D[D12]	VERTICAL LINEARITY (C CORRECTION)	-016 ~ +016	+001
DE [480/60i OVER]			
D[E01]	HORIZONTAL SIZE	-064 ~ +064	-019
D[E02]	VERTICAL SIZE	-064 ~ +064	+010
D[E03]	HORIZONTAL POSITION	-064 ~ +064	+013
D[E04]	VERTICAL POSITION	-064 ~ +064	000
D[E05]	SIDE PIN DISTORTION	-032 ~ +032	+007
D[E06]	CORNER DISTORTION (W)	-032 ~ +032	000
D[E07]	CORNER DISTORTION (S)	-032 ~ +032	000
D[E08]	PARALLELOGRAM DISTORTION	-032 ~ +032	-002
D[E09]	TRAPEZOIDAL DISTORTION	-032 ~ +032	-003
D[E10]	HORIZONTAL ARC DISTORTION	-032 ~ +032	000
D[E11]	VERTICAL LINEARITY (S CORRECTION)	-016 ~ +016	-005
D[E12]	VERTICAL LINEARITY (C CORRECTION)	-016 ~ +016	-003
DF [480/60i UNDER]			
D[F01]	HORIZONTAL SIZE	-064 ~ +064	-009
D[F02]	VERTICAL SIZE	-064 ~ +064	-024
D[F03]	HORIZONTAL POSITION	-064 ~ +064	000
D[F04]	VERTICAL POSITION	-064 ~ +064	000
D[F05]	SIDE PIN DISTORTION	-032 ~ +032	000
D[F06]	CORNER DISTORTION (W)	-032 ~ +032	000
D[F07]	CORNER DISTORTION (S)	-032 ~ +032	000
D[F08]	PARALLELOGRAM DISTORTION	-032 ~ +032	000
D[F09]	TRAPEZOIDAL DISTORTION	-032 ~ +032	000
D[F10]	HORIZONTAL ARC DISTORTION	-032 ~ +032	000
D[F11]	VERTICAL LINEARITY (S CORRECTION)	-016 ~ +016	000
D[F12]	VERTICAL LINEARITY (C CORRECTION)	-016 ~ +016	000
DG [576/50i OVER]			
D[G01]	HORIZONTAL SIZE	-064 ~ +064	-016
D[G02]	VERTICAL SIZE	-064 ~ +064	+010
D[G03]	HORIZONTAL POSITION	-064 ~ +064	+013
D[G04]	VERTICAL POSITION	-064 ~ +064	+005
D[G05]	SIDE PIN DISTORTION	-032 ~ +032	+005

No.	Setting item	Variable range	Initial setting value
D[G06]	CORNER DISTORTION (W)	-032 ~ +032	000
D[G07]	CORNER DISTORTION (S)	-032 ~ +032	-002
D[G08]	PARALLELOGRAM DISTORTION	-032 ~ +032	000
D[G09]	TRAPEZOIDAL DISTORTION	-032 ~ +032	-005
D[G10]	HORIZONTAL ARC DISTORTION	-032 ~ +032	000
D[G11]	VERTICAL LINEARITY (S CORRECTION)	-016 ~ +016	-005
D[G12]	VERTICAL LINEARITY (C CORRECTION)	-016 ~ +016	000
DH [576/50i UNDER]			
D[H01]	HORIZONTAL SIZE	-064 ~ +064	-010
D[H02]	VERTICAL SIZE	-064 ~ +064	-025
D[H03]	HORIZONTAL POSITION	-064 ~ +064	000
D[H04]	VERTICAL POSITION	-064 ~ +064	000
D[H05]	SIDE PIN DISTORTION	-032 ~ +032	000
D[H06]	CORNER DISTORTION (W)	-032 ~ +032	000
D[H07]	CORNER DISTORTION (S)	-032 ~ +032	000
D[H08]	PARALLELOGRAM DISTORTION	-032 ~ +032	000
D[H09]	TRAPEZOIDAL DISTORTION	-032 ~ +032	000
D[H10]	HORIZONTAL ARC DISTORTION	-032 ~ +032	000
D[H11]	VERTICAL LINEARITY (S CORRECTION)	-016 ~ +016	000
D[H12]	VERTICAL LINEARITY (C CORRECTION)	-016 ~ +016	000
DI [480/60p OVER]			
D[I01]	HORIZONTAL SIZE	-064 ~ +064	-028
D[I02]	VERTICAL SIZE	-064 ~ +064	+015
D[I03]	HORIZONTAL POSITION	-064 ~ +064	+012
D[I04]	VERTICAL POSITION	-064 ~ +064	+005
D[I05]	SIDE PIN DISTORTION	-032 ~ +032	+002
D[I06]	CORNER DISTORTION (W)	-032 ~ +032	000
D[I07]	CORNER DISTORTION (S)	-032 ~ +032	000
D[I08]	PARALLELOGRAM DISTORTION	-032 ~ +032	000
D[I09]	TRAPEZOIDAL DISTORTION	-032 ~ +032	-005
D[I10]	HORIZONTAL ARC DISTORTION	-032 ~ +032	000
D[I11]	VERTICAL LINEARITY (S CORRECTION)	-016 ~ +016	-005
D[I12]	VERTICAL LINEARITY (C CORRECTION)	-016 ~ +016	-005
DJ [480/60p UNDER]			
D[J01]	HORIZONTAL SIZE	-064 ~ +064	-011
D[J02]	VERTICAL SIZE	-064 ~ +064	-024
D[J03]	HORIZONTAL POSITION	-064 ~ +064	000
D[J04]	VERTICAL POSITION	-064 ~ +064	-002
D[J05]	SIDE PIN DISTORTION	-032 ~ +032	+001
D[J06]	CORNER DISTORTION (W)	-032 ~ +032	000
D[J07]	CORNER DISTORTION (S)	-032 ~ +032	000
D[J08]	PARALLELOGRAM DISTORTION	-032 ~ +032	000

No.	Setting item	Variable range	Initial setting value
D[J09]	TRAPEZOIDAL DISTORTION	-032 ~ +032	000
D[J10]	HORIZONTAL ARC DISTORTION	-032 ~ +032	000
D[J11]	VERTICAL LINEARITY (S CORRECTION)	-016 ~ +016	000
D[J12]	VERTICAL LINEARITY (C CORRECTION)	-016 ~ +016	+002
DK [576/50p OVER]			
D[K01]	HORIZONTAL SIZE	-064 ~ +064	-030
D[K02]	VERTICAL SIZE	-064 ~ +064	+015
D[K03]	HORIZONTAL POSITION	-064 ~ +064	+010
D[K04]	VERTICAL POSITION	-064 ~ +064	+005
D[K05]	SIDE PIN DISTORTION	-032 ~ +032	000
D[K06]	CORNER DISTORTION (W)	-032 ~ +032	000
D[K07]	CORNER DISTORTION (S)	-032 ~ +032	-005
D[K08]	PARALLELOGRAM DISTORTION	-032 ~ +032	000
D[K09]	TRAPEZOIDAL DISTORTION	-032 ~ +032	-005
D[K10]	HORIZONTAL ARC DISTORTION	-032 ~ +032	000
D[K11]	VERTICAL LINEARITY (S CORRECTION)	-016 ~ +016	-004
D[K12]	VERTICAL LINEARITY (C CORRECTION)	-016 ~ +016	000
DL [576/50p UNDER]			
D[L01]	HORIZONTAL SIZE	-064 ~ +064	-010
D[L02]	VERTICAL SIZE	-064 ~ +064	-025
D[L03]	HORIZONTAL POSITION	-064 ~ +064	000
D[L04]	VERTICAL POSITION	-064 ~ +064	000
D[L05]	SIDE PIN DISTORTION	-032 ~ +032	000
D[L06]	CORNER DISTORTION (W)	-032 ~ +032	000
D[L07]	CORNER DISTORTION (S)	-032 ~ +032	000
D[L08]	PARALLELOGRAM DISTORTION	-032 ~ +032	000
D[L09]	TRAPEZOIDAL DISTORTION	-032 ~ +032	000
D[L10]	HORIZONTAL ARC DISTORTION	-032 ~ +032	000
D[L11]	VERTICAL LINEARITY (S CORRECTION)	-016 ~ +016	000
D[L12]	VERTICAL LINEARITY (C CORRECTION)	-016 ~ +016	000
DM [1080/60i OVER]			
D[M01]	HORIZONTAL SIZE	-064 ~ +064	-032
D[M02]	VERTICAL SIZE	-064 ~ +064	010
D[M03]	HORIZONTAL POSITION	-064 ~ +064	+025
D[M04]	VERTICAL POSITION	-064 ~ +064	000
D[M05]	SIDE PIN DISTORTION	-032 ~ +032	+015
D[M06]	CORNER DISTORTION (W)	-032 ~ +032	000
D[M07]	CORNER DISTORTION (S)	-032 ~ +032	000
D[M08]	PARALLELOGRAM DISTORTION	-032 ~ +032	-001
D[M09]	TRAPEZOIDAL DISTORTION	-032 ~ +032	+002
D[M10]	HORIZONTAL ARC DISTORTION	-032 ~ +032	000
D[M11]	VERTICAL LINEARITY (S CORRECTION)	-016 ~ +016	-002
D[M12]	VERTICAL LINEARITY (C CORRECTION)	-016 ~ +016	000

No.	Setting item	Variable range	Initial setting value
DN [1080/60i UNDER]			
D[N01]	HORIZONTAL SIZE	-064 ~ +064	-011
D[N02]	VERTICAL SIZE	-064 ~ +064	-025
D[N03]	HORIZONTAL POSITION	-064 ~ +064	000
D[N04]	VERTICAL POSITION	-064 ~ +064	+001
D[N05]	SIDE PIN DISTORTION	-032 ~ +032	+001
D[N06]	CORNER DISTORTION (W)	-032 ~ +032	000
D[N07]	CORNER DISTORTION (S)	-032 ~ +032	000
D[N08]	PARALLELOGRAM DISTORTION	-032 ~ +032	000
D[N09]	TRAPEZOIDAL DISTORTION	-032 ~ +032	000
D[N10]	HORIZONTAL ARC DISTORTION	-032 ~ +032	000
D[N11]	VERTICAL LINEARITY (S CORRECTION)	-016 ~ +016	000
D[N12]	VERTICAL LINEARITY (C CORRECTION)	-016 ~ +016	000
DO [1035/60i OVER]			
D[O01]	HORIZONTAL SIZE	-064 ~ +064	-032
D[O02]	VERTICAL SIZE	-064 ~ +064	+025
D[O03]	HORIZONTAL POSITION	-064 ~ +064	+025
D[O04]	VERTICAL POSITION	-064 ~ +064	+005
D[O05]	SIDE PIN DISTORTION	-032 ~ +032	+015
D[O06]	CORNER DISTORTION (W)	-032 ~ +032	000
D[O07]	CORNER DISTORTION (S)	-032 ~ +032	000
D[O08]	PARALLELOGRAM DISTORTION	-032 ~ +032	000
D[O09]	TRAPEZOIDAL DISTORTION	-032 ~ +032	-001
D[O10]	HORIZONTAL ARC DISTORTION	-032 ~ +032	000
D[O11]	VERTICAL LINEARITY (S CORRECTION)	-016 ~ +016	+002
D[O12]	VERTICAL LINEARITY (C CORRECTION)	-016 ~ +016	000
DP [1035/60i UNDER]			
D[P01]	HORIZONTAL SIZE	-064 ~ +064	-012
D[P02]	VERTICAL SIZE	-064 ~ +064	-030
D[P03]	HORIZONTAL POSITION	-064 ~ +064	000
D[P04]	VERTICAL POSITION	-064 ~ +064	000
D[P05]	SIDE PIN DISTORTION	-032 ~ +032	+001
D[P06]	CORNER DISTORTION (W)	-032 ~ +032	000
D[P07]	CORNER DISTORTION (S)	-032 ~ +032	000
D[P08]	PARALLELOGRAM DISTORTION	-032 ~ +032	000
D[P09]	TRAPEZOIDAL DISTORTION	-032 ~ +032	000
D[P10]	HORIZONTAL ARC DISTORTION	-032 ~ +032	000
D[P11]	VERTICAL LINEARITY (S CORRECTION)	-016 ~ +016	000
D[P12]	VERTICAL LINEARITY (C CORRECTION)	-016 ~ +016	000
DQ [1080/50i OVER]			
D[Q01]	HORIZONTAL SIZE	-064 ~ +064	-025
D[Q02]	VERTICAL SIZE	-064 ~ +064	000
D[Q03]	HORIZONTAL POSITION	-064 ~ +064	+030

No.	Setting item	Variable range	Initial setting value
D[Q04]	VERTICAL POSITION	-064 ~ +064	000
D[Q05]	SIDE PIN DISTORTION	-032 ~ +032	+015
D[Q06]	CORNER DISTORTION (W)	-032 ~ +032	000
D[Q07]	CORNER DISTORTION (S)	-032 ~ +032	000
D[Q08]	PARALLELOGRAM DISTORTION	-032 ~ +032	000
D[Q09]	TRAPEZOIDAL DISTORTION	-032 ~ +032	-005
D[Q10]	HORIZONTAL ARC DISTORTION	-032 ~ +032	000
D[Q11]	VERTICAL LINEARITY (S CORRECTION)	-016 ~ +016	-002
D[Q12]	VERTICAL LINEARITY (C CORRECTION)	-016 ~ +016	-002
DR [1080/50i UNDER]			
D[R01]	HORIZONTAL SIZE	-064 ~ +064	-015
D[R02]	VERTICAL SIZE	-064 ~ +064	-025
D[R03]	HORIZONTAL POSITION	-064 ~ +064	000
D[R04]	VERTICAL POSITION	-064 ~ +064	000
D[R05]	SIDE PIN DISTORTION	-032 ~ +032	000
D[R06]	CORNER DISTORTION (W)	-032 ~ +032	000
D[R07]	CORNER DISTORTION (S)	-032 ~ +032	000
D[R08]	PARALLELOGRAM DISTORTION	-032 ~ +032	000
D[R09]	TRAPEZOIDAL DISTORTION	-032 ~ +032	000
D[R10]	HORIZONTAL ARC DISTORTION	-032 ~ +032	000
D[R11]	VERTICAL LINEARITY (S CORRECTION)	-016 ~ +016	000
D[R12]	VERTICAL LINEARITY (C CORRECTION)	-016 ~ +016	000
DS [1080/24pF OVER]			
D[S01]	HORIZONTAL SIZE	-064 ~ +064	-030
D[S02]	VERTICAL SIZE	-064 ~ +064	+010
D[S03]	HORIZONTAL POSITION	-064 ~ +064	+037
D[S04]	VERTICAL POSITION	-064 ~ +064	000
D[S05]	SIDE PIN DISTORTION	-032 ~ +032	+017
D[S06]	CORNER DISTORTION (W)	-032 ~ +032	000
D[S07]	CORNER DISTORTION (S)	-032 ~ +032	000
D[S08]	PARALLELOGRAM DISTORTION	-032 ~ +032	-001
D[S09]	TRAPEZOIDAL DISTORTION	-032 ~ +032	-001
D[S10]	HORIZONTAL ARC DISTORTION	-032 ~ +032	000
D[S11]	VERTICAL LINEARITY (S CORRECTION)	-016 ~ +016	+002
D[S12]	VERTICAL LINEARITY (C CORRECTION)	-016 ~ +016	000
DT [1080/24pF UNDER]			
D[T01]	HORIZONTAL SIZE	-064 ~ +064	-011
D[T02]	VERTICAL SIZE	-064 ~ +064	-028
D[T03]	HORIZONTAL POSITION	-064 ~ +064	000
D[T04]	VERTICAL POSITION	-064 ~ +064	+001
D[T05]	SIDE PIN DISTORTION	-032 ~ +032	+001
D[T06]	CORNER DISTORTION (W)	-032 ~ +032	000

No.	Setting item	Variable range	Initial setting value
D[T07]	CORNER DISTORTION (S)	-032 ~ +032	000
D[T08]	PARALLELOGRAM DISTORTION	-032 ~ +032	000
D[T09]	TRAPEZOIDAL DISTORTION	-032 ~ +032	000
D[T10]	HORIZONTAL ARC DISTORTION	-032 ~ +032	000
D[T11]	VERTICAL LINEARITY (S CORRECTION)	-016 ~ +016	000
D[T12]	VERTICAL LINEARITY (C CORRECTION)	-016 ~ +016	000
DU [720/60p OVER]			
D[U01]	HORIZONTAL SIZE	-064 ~ +064	+014
D[U02]	VERTICAL SIZE	-064 ~ +064	+012
D[U03]	HORIZONTAL POSITION	-064 ~ +064	+013
D[U04]	VERTICAL POSITION	-064 ~ +064	000
D[U05]	SIDE PIN DISTORTION	-032 ~ +032	+012
D[U06]	CORNER DISTORTION (W)	-032 ~ +032	-002
D[U07]	CORNER DISTORTION (S)	-032 ~ +032	-002
D[U08]	PARALLELOGRAM DISTORTION	-032 ~ +032	000
D[U09]	TRAPEZOIDAL DISTORTION	-032 ~ +032	+001
D[U10]	HORIZONTAL ARC DISTORTION	-032 ~ +032	000
D[U11]	VERTICAL LINEARITY (S CORRECTION)	-016 ~ +016	-002
D[U12]	VERTICAL LINEARITY (C CORRECTION)	-016 ~ +016	000
DV [720/60p UNDER]			
D[V01]	HORIZONTAL SIZE	-064 ~ +064	-017
D[V02]	VERTICAL SIZE	-064 ~ +064	-028
D[V03]	HORIZONTAL POSITION	-064 ~ +064	000
D[V04]	VERTICAL POSITION	-064 ~ +064	+001
D[V05]	SIDE PIN DISTORTION	-032 ~ +032	+001
D[V06]	CORNER DISTORTION (W)	-032 ~ +032	000
D[V07]	CORNER DISTORTION (S)	-032 ~ +032	000
D[V08]	PARALLELOGRAM DISTORTION	-032 ~ +032	000
D[V09]	TRAPEZOIDAL DISTORTION	-032 ~ +032	000
D[V10]	HORIZONTAL ARC DISTORTION	-032 ~ +032	000
D[V11]	VERTICAL LINEARITY (S CORRECTION)	-016 ~ +016	000
D[V12]	VERTICAL LINEARITY (C CORRECTION)	-016 ~ +016	000
DW [720/50p OVER]			
D[W01]	HORIZONTAL SIZE	-064 ~ +064	+020
D[W02]	VERTICAL SIZE	-064 ~ +064	-010
D[W03]	HORIZONTAL POSITION	-064 ~ +064	000
D[W04]	VERTICAL POSITION	-064 ~ +064	+003
D[W05]	SIDE PIN DISTORTION	-032 ~ +032	+010
D[W06]	CORNER DISTORTION (W)	-032 ~ +032	-002
D[W07]	CORNER DISTORTION (S)	-032 ~ +032	-002
D[W08]	PARALLELOGRAM DISTORTION	-032 ~ +032	+003
D[W09]	TRAPEZOIDAL DISTORTION	-032 ~ +032	000

No.	Setting item	Variable range	Initial setting value
D[W10]	HORIZONTAL ARC DISTORTION	-032 ~ +032	000
D[W11]	VERTICAL LINEARITY (S CORRECTION)	-016 ~ +016	-002
D[W12]	VERTICAL LINEARITY (C CORRECTION)	-016 ~ +016	-003
DX [720/50p UNDER]			
D[X01]	HORIZONTAL SIZE	-064 ~ +064	-015
D[X02]	VERTICAL SIZE	-064 ~ +064	-027
D[X03]	HORIZONTAL POSITION	-064 ~ +064	000
D[X04]	VERTICAL POSITION	-064 ~ +064	000
D[X05]	SIDE PIN DISTORTION	-032 ~ +032	000
D[X06]	CORNER DISTORTION (W)	-032 ~ +032	000
D[X07]	CORNER DISTORTION (S)	-032 ~ +032	000
D[X08]	PARALLELOGRAM DISTORTION	-032 ~ +032	000
D[X09]	TRAPEZOIDAL DISTORTION	-032 ~ +032	000
D[X10]	HORIZONTAL ARC DISTORTION	-032 ~ +032	000
D[X11]	VERTICAL LINEARITY (S CORRECTION)	-016 ~ +016	000
D[X12]	VERTICAL LINEARITY (C CORRECTION)	-016 ~ +016	000
DY [ASPECT]			
D[Y01]	NTSC OVERSCAN VERTICAL SIZE	-064 ~ +064	+008
D[Y02]	NTSC OVERSCAN VERTICAL POSITION	-064 ~ +064	+001
D[Y03]	NTSC OVERSCAN SIDE PIN DISTORTION	-032 ~ +032	+012
D[Y04]	NTSC UNDERSCAN VERTICAL SIZE	-064 ~ +064	+006
D[Y05]	NTSC UNDERSCAN VERTICAL POSITION	-064 ~ +064	+001
D[Y06]	NTSC UNDERSCAN SIDE PIN DISTORTION	-032 ~ +032	+012
D[Y07]	PAL OVERSCAN VERTICAL SIZE	-064 ~ +064	+005
D[Y08]	PAL OVERSCAN VERTICAL POSITION	-064 ~ +064	+001
D[Y09]	PAL OVERSCAN SIDE PIN DISTORTION	-032 ~ +032	+012
D[Y10]	PAL UNDERSCAN VERTICAL SIZE	-064 ~ +064	+005
D[Y11]	PAL UNDERSCAN VERTICAL POSITION	-064 ~ +064	+001
D[Y12]	PAL UNDERSCAN SIDE PIN DISTORTION	-032 ~ +032	+012
D[Y13]	480i OVERSCAN VERTICAL SIZE	-064 ~ +064	+010
D[Y14]	480i OVERSCAN VERTICAL POSITION	-064 ~ +064	+001
D[Y15]	480i OVERSCAN SIDE PIN DISTORTION	-032 ~ +032	+012
D[Y16]	480i UNDERSCAN VERTICAL SIZE	-064 ~ +064	+006
D[Y17]	480i UNDERSCAN VERTICAL POSITION	-064 ~ +064	+001
D[Y18]	480i UNDERSCAN SIDE PIN DISTORTION	-032 ~ +032	+012
D[Y19]	576i OVERSCAN VERTICAL SIZE	-064 ~ +064	+010
D[Y20]	576i OVERSCAN VERTICAL POSITION	-064 ~ +064	+001
D[Y21]	576i OVERSCAN SIDE PIN DISTORTION	-032 ~ +032	+012
D[Y22]	576i UNDERSCAN VERTICAL SIZE	-064 ~ +064	+006
D[Y23]	576i UNDERSCAN VERTICAL POSITION	-064 ~ +064	+001
D[Y24]	576i UNDERSCAN SIDE PIN DISTORTION	-032 ~ +032	+012
D[Y25]	480p OVERSCAN VERTICAL SIZE	-064 ~ +064	+010

No.	Setting item	Variable range	Initial setting value
D[Y26]	480p OVERSCAN VERTICAL POSITION	-064 ~ +064	+001
D[Y27]	480p OVERSCAN SIDE PIN DISTORTION	-032 ~ +032	+012
D[Y28]	480p UNDERSCAN VERTICAL SIZE	-064 ~ +064	+006
D[Y29]	480p UNDERSCAN VERTICAL POSITION	-064 ~ +064	+001
D[Y30]	480p UNDERSCAN SIDE PIN DISTORTION	-032 ~ +032	+012
D[Y31]	576p OVERSCAN VERTICAL SIZE	-064 ~ +064	+010
D[Y32]	576p OVERSCAN VERTICAL POSITION	-064 ~ +064	+001
D[Y33]	576p OVERSCAN SIDE PIN DISTORTION	-032 ~ +032	+012
D[Y34]	576p UNDERSCAN VERTICAL SIZE	-064 ~ +064	+006
D[Y35]	576p UNDERSCAN VERTICAL POSITION	-064 ~ +064	+001
D[Y36]	576p UNDERSCAN SIDE PIN DISTORTION	-032 ~ +032	+012
DZ [V.LIN/FOCUS]			
D[Z01]	45 ~ 55Hz VERTICAL LINEARITY (S CORRECTION)	-016 ~ +016	+011
D[Z02]	45 ~ 55Hz VERTICAL LINEARITY (C CORRECTION)	-016 ~ +016	+003
D[Z03]	45 ~ 55Hz FOCUS (PARABOLA)	-032 ~ +032	000
D[Z04]	55 ~ 65Hz VERTICAL LINEARITY (S CORRECTION)	-016 ~ +016	+011
D[Z05]	55 ~ 65Hz VERTICAL LINEARITY (C CORRECTION)	-016 ~ +016	+003
D[Z06]	55 ~ 65Hz FOCUS (PARABOLA)	-032 ~ +032	000
D[Z07]	720/60p VERTICAL LINEARITY (S CORRECTION)	-016 ~ +016	000
D[Z08]	720/60p VERTICAL LINEARITY (C CORRECTION)	-016 ~ +016	000
D[Z09]	720/60p FOCUS (PARABOLA)	-032 ~ +032	-030
D1 [ROTATION/PURITY]			
D[101]	ROTATION	-032 ~ +031	+017
D[102]	PURITY	-128 ~ +127	000
D2 [COMMON]			
D[201]	HORIZONTAL SIZE	000 ~ 127	063
D[202]	VERTICAL SIZE	000 ~ 127	063
D[203]	HORIZONTAL POSITION	000 ~ 127	063
D[204]	VERTICAL POSITION	000 ~ 127	063
D[205]	SIDE PIN DISTORTION	000 ~ 063	031
D[206]	CORNER DISTORTION (W)	000 ~ 063	031
D[207]	CORNER DISTORTION (S)	000 ~ 063	031
D[208]	PARALLELOGRAM DISTORTION	000 ~ 063	031
D[209]	TRAPEZOIDAL DISTORTION	000 ~ 063	031
D[210]	HORIZONTAL ARC DISTORTION	000 ~ 063	031
D[211]	VERTICAL LINEARITY (S CORRECTION)	000 ~ 031	016
D[212]	VERTICAL LINEARITY (C CORRECTION)	000 ~ 031	016
D[213]	VERTICAL MAX SIZE CONTROL	000 ~ 031	016
D[214]	FOCUS (PHASE)	000 ~ 063	022
D[215]	FOCUS (PARABOLA)	000 ~ 063	044
D3 [ZOOM SIZE]			
D[301]	HORIZONTAL SIZE	-064 ~ +064	+020

No.	Setting item	Variable range	Initial setting value
D[302]	VERTICAL SIZE	-064 ~ +064	+040
D[303]	HORIZONTAL POSITION	-064 ~ +064	000
D[304]	VERTICAL POSITION	-064 ~ +064	000
D[305]	SIDE PIN DISTORTION	-032 ~ +032	-003

[CPU BLOCK]

No.	Setting item	Variable range	Initial setting value
CC [SETTING]			
C[C41]	AKB SETTING	000 ~ 003	000
CE [OSD etc]			
C[E05]	NTSC, 480/60i CORNER DISTORTION (W)	-032 ~ +032	000
C[E06]	NTSC, 480/60i CORNER DISTORTION (S)	-032 ~ +032	000
C[E07]	NTSC, 480/60i PARALLELOGRAM DISTORTION	-032 ~ +032	000
C[E08]	NTSC, 480/60i TRAPEZOIDAL DISTORTION	-032 ~ +032	-002
C[E09]	NTSC, 480/60i HORIZONTAL ARC DISTORTION	-032 ~ +032	000
C[E10]	PAL, 576/50i CORNER DISTORTION (W)	-032 ~ +032	000
C[E11]	PAL, 576/50i CORNER DISTORTION (S)	-032 ~ +032	000
C[E12]	PAL, 576/50i PARALLELOGRAM DISTORTION	-032 ~ +032	000
C[E13]	PAL, 576/50i TRAPEZOIDAL DISTORTION	-032 ~ +032	-002
C[E14]	PAL, 576/50i HORIZONTAL ARC DISTORTION	-032 ~ +032	000
C[E15]	480/60p CORNER DISTORTION (W)	-032 ~ +032	000
C[E16]	480/60p CORNER DISTORTION (S)	-032 ~ +032	000
C[E17]	480/60p PARALLELOGRAM DISTORTION	-032 ~ +032	000
C[E18]	480/60p TRAPEZOIDAL DISTORTION	-032 ~ +032	-002
C[E19]	480/60p HORIZONTAL ARC DISTORTION	-032 ~ +032	000
C[E20]	576/50p CORNER DISTORTION (W)	-032 ~ +032	000
C[E21]	576/50p CORNER DISTORTION (S)	-032 ~ +032	000
C[E22]	576/50p PARALLELOGRAM DISTORTION	-032 ~ +032	000
C[E23]	576/50p TRAPEZOIDAL DISTORTION	-032 ~ +032	-002
C[E24]	576/50p HORIZONTAL ARC DISTORTION	-032 ~ +032	000

NOTE : Do not alter the adjustment values of CPU BLOCK (excluding the CC41 and CE05 to CE24), UPC1884 ADJ. and TA1276 ADJ.

1.10 ADJUSTMENT PROCEDURES

1.10.1 SCREEN VOLTAGE COARSE ADJUSTMENT

SCREEN VOLTAGE COARSE ADJUSTMENT	
Measuring Instruments	**Signal generator (All-black signal, Crosshatch signal)** **Oscilloscope**
Card (Slot)	**Component/RGB Input Card (Slot 1)**
Test Points	**Anode of CRT** **TP-47B, TP-47R, TP-47G [CRT SOCKET PWB]** **TP-GND [CRT SOCKET PWB]**
Adjustment Points	**SCREEN VR [Bottom potentiometer on high-voltage transformer]** **VR502 (High-voltage VR) [S.CORRECTION PWB]** **FOCUS VR1 [Top potentiometer on high-voltage transformer]** **FOCUS VR2 [Middle potentiometer on high-voltage transformer]** **CC41 (AKB Setting) [Service Menu]**

Note: Ensure that the value of CC41 (CPU BLOCK) in the Service Menu is "000".

(1) Turn the SCREEN VR fully counterclockwise.
(2) Connect the oscilloscope across TP-47B and TP-GND.
(3) Connect the GND of high-voltage voltmeter to the braided wire.
(4) Connect the high-voltage voltmeter to the anode of the CRT and turn the unit ON.
(5) Apply the 1080/60i component all-black signal to INPUT A.
(6) Check that the high-voltage value is **24** to **25 kV**. If it is higher than **25 kV**, adjustment the **VR502** so that the high-voltage value becomes to specified value.
(7) Turn the **SCREEN VR** slowly clockwise until the raster lights up slightly.
(8) Set the value of **CC41 (CPU BLOCK)** in the Service Menu from "000" to "002".
(9) Turn the **SCREEN VR** slowly clockwise until the voltage amplitude < A > of the AKB pulse at TP-47G is about **25 V ± 2 V**.
(10) Observe the waveforms of TP-47R and TP-47B, adjust the SCREEN VR so that the amplitude voltage < A > of the AKB pulse become to **25V ± 2V**.
(11) Apply the 1080/60i crosshatch signal to INPUT A.
(12) Adjust the **FOCUS VR1** and **VR2** so that the entire image is in focus.

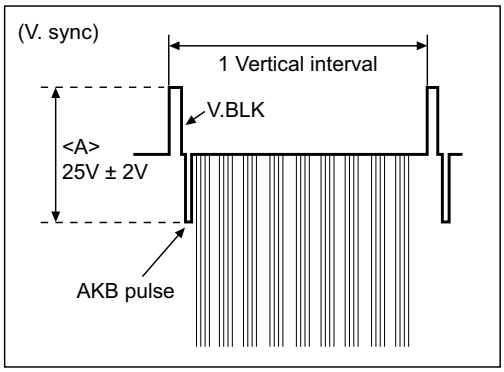

1.10.2 HIGH-VOLTAGE COARSE ADJUSTMENT

HIGH-VOLTAGE COARSE ADJUSTMENT	
Measuring Instruments	**Signal generator (Crosshatch signal with circle pattern)** **High-voltage voltmeter**
Card (Slot)	**Component/RGB Input Card (Slot 1)**
Test Points	**Anode of CRT**
Adjustment Points	**VR502 (High-Voltage VR) [S. CORRECTION PWB]** **FOCUS VR1 [Top potentiometer on high-voltage transformer]** **FOCUS VR2 [Middle potentiometer on high-voltage transformer]**

Note: Perform the following adjustments after completing the Screen Voltage Coarse adjustment.

(1) Turn **VR502** fully clockwise (the minimum position).
(2) Turn **VR501** fully counterclockwise (the minimum position).
(3) Connect the high-voltage voltmeter to the anode of the CRT and turn the unit ON.
(4) Apply the 1080/60i crosshatch signal with circle pattern to INPUT A (Terminal Y on the Component/RGB Input Card).
(5) Turn **VR502** slowly counterclockwise until the value of the high voltage is about **25 kV**.
(6) Adjust the **FOCUS VR1** and **VR2** so that the entire image is in focus.

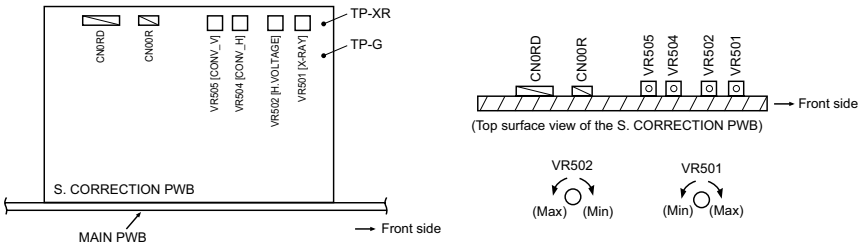

1.10.3 X-RAY PROTECTOR ADJUSTMENT/CHECK

X-RAY PROTECTOR ADJUSTMENT/CHECK	
Measuring Instruments	**Signal generator (All-white signal)** **High-voltage voltmeter** **DC voltmeter**
Card (Slot)	**Component/RGB Input Card (Slot 1)**
Test Points	**Anode of CRT** **TP-XR, TP-GND [S. CORRECTION PWB]**
Adjustment Points	**VR501 (X-Ray Protector Adjustment VR) [S. CORRECTION PWB]** **VR502 (High-Voltage VR) [S. CORRECTION PWB]**

Note: Perform the following adjustment after completing the Screen Voltage Coarse adjustment.

(1) Turn the **VR502** fully clockwise (the minimum position).
(2) Turn the **VR501** fully counterclockwise (the minimum position).
(3) Set the CONTRAST and BRIGHT potentiometers on the front panel to the fully clockwise positions.
(4) Connect the high-voltage voltmeter to the anode of the CRT and turn the unit ON.
(5) Apply the 1080/60i all-white signal to INPUT A (Terminal Y on the Component/RGB Input Card).
(6) Turn the **VR502** slowly counterclockwise until the value of the high-voltage voltmeter is **27.0 kV ± 0.2 kV**.
(7) Connect the DC voltmeter across TP-XR and TP-GND.
(8) Turn the **VR501** clockwise until the voltmeter reading is **5.5 V**.
(9) Turn the **VR501** slowly clockwise until the point at which the X-ray protector starts operation.
(The power turns off at the first operation and then turns on again 5 seconds later. At the second operation, the power turns off and the LED of the INPUT SELECT D of the front panel blinks. When two operations are done consecutively, it stops at the stand-by position.)
(10) Turn the **VR502** slightly clockwise and turn the unit ON again.
(11) Turn the **VR502** slowly counterclockwise and check the point at which the X-ray protector starts to operate.
Check that the high-voltage voltmeter value at which the X-ray protector starts to operate, is **27.0 kV ± 0.2 kV**.
(12) Apply adhesive for fixing the **VR501** in the adjusted position.
(13) Set the CONTRAST and BRIGHT potentiometers on the front panel to the center click positions.
(14) Turn the **VR502** fully clockwise (the minimum position).

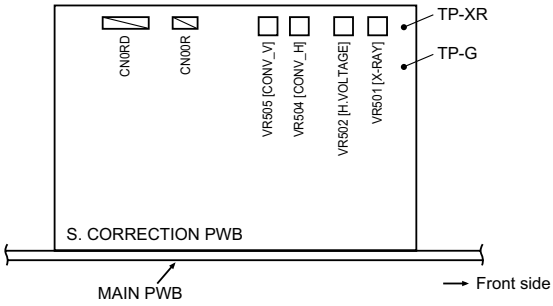

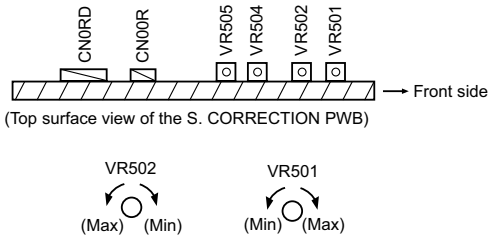

1.10.4 HIGH-VOLTAGE ADJUSTMENT

HIGH-VOLTAGE ADJUSTMENT	
Measuring Instruments	**Signal generator (All-black signal)** **High-voltage voltmeter**
Card (Slot)	**Component/RGB Input Card (Slot 1)**
Test Points	**Anode of CRT**
Adjustment Points	**VR502 (High-Voltage VR) [S. CORRECTION PWB]**

Note: Perform the following adjustments after completing the Screen Voltage Coarse adjustment and X-Ray Protector adjustment.

(1) Turn the **VR502** fully clockwise.
(2) Set the CONTRAST and BRIGHT potentiometers on the front panel to the fully clockwise positions.
(3) Connect the high-voltage voltmeter to the anode of the CRT and turn the unit ON.
(4) Apply the 1080/60i all-black signal to INPUT A (Terminal Y on the Component/RGB Input Card).
(5) If the raster is visible, adjust the BRIGHT potentiometer on the front panel to turn the screen all black.
(6) Turn the **VR502** slowly counterclockwise until the value of the high voltage is **25 kV ± 0.2 kV**.
(7) Apply adhesive for fixing the **VR502** in the adjusted position.
(8) Set the CONTRAST and BRIGHT potentiometers on the front panel to the center click positions.

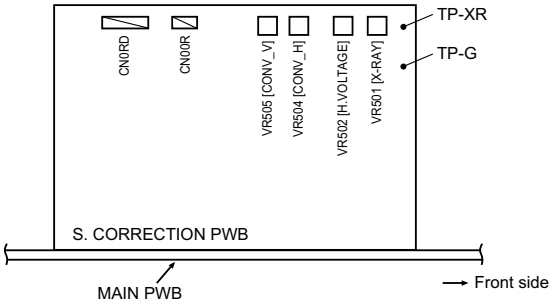

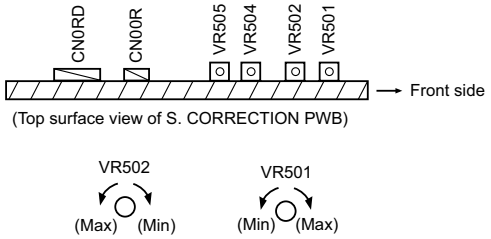

1.10.5 FOCUS ADJUSTMENT

FOCUS ADJUSTMENT	
Measur Instruments	**Signal generator (Crosshatch signal)**
Card (Slot)	**Component/RGB Input Card (Slot 1)**
Test Points	
Adjustment Points	**FOCUS VR1 [Top potentiometer on high-voltage transformer]** **FOCUS VR2 [Middle potentiometer on high-voltage transformer]**

Note: Perform the following adjustments after completing the Screen Voltage Coarse adjustment , X-Ray Protector and High-Voltage adjustments.

(1) Apply the 1080/60i crosshatch signal to INPUT A (Terminal Y on the Component/RGB Input Card).
(2) Set the CONTRAST and BRIGHT potentiometers on the front panel to the center click positions.
(3) Adjust the **FOCUS VR1** and **VR2** so that the horizontal and vertical lines in the image are clearly visible.

1.10.6 IMAGE ROTATION ADJUSTMENT

IMAGE ROTATION ADJUSTMENT	
Measuring Instruments	**Signal generator (Size adjustment signal)**
Card (Slot)	**Component/RGB Input Card (Slot 1)**
Test Points	
Adjustment Points	**D101 (Rotation), DM04 (Vertical Position) [Service Menu]**

Notes:

- **Perform the following adjustments after completing the Screen Voltage Coarse adjustment, High-Voltage, Focus and X-Ray Protector adjustments.**
- **Ensure that CN0RD and CN00R on the S. Correction PWB are connected to the Deflection Yoke and Main PWB.**

(1) Apply the 1080/60i size adjustment signal to INPUT A (Terminal Y on the Component/RGB Input Card).
(2) Adjust **D101** of the Service Menu to decrease the image tilting to no more than **1.5 mm** (**1.5 mm** or less above or below the middle line). If the reference point which is the vertical center position on the left of the image (reference points) is deviated, adjust **DM04** to correct it.

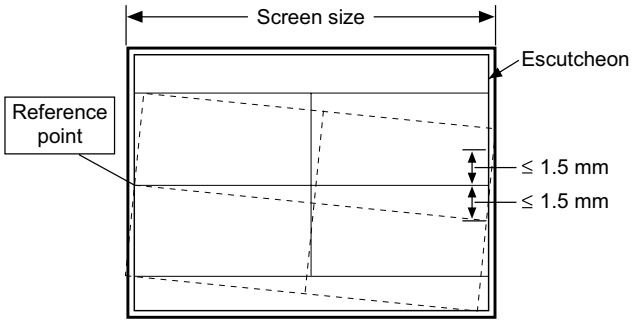

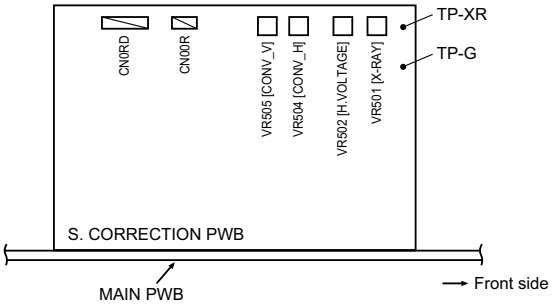

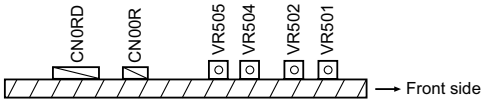

(Top surface view of S. CORRECTION PWB)

1.10.7 CONVERGENCE ADJUSTMENT

CONVERGENCE ADJUSTMENT	
Measuring Instruments	**Signal generator (Crosshatch signal with circle pattern)**
Card (Slot)	**Component/RGB Input Card (Slot 1)**
Test Points	
Adjustment Points	**VR504 (CONV_H) [S. CORRECTION PWB]** **VR505 (CONV_V) [S. CORRECTION PWB]**

Notes:

- **Perform the following adjustments after completing the Screen Voltage Coarse adjustment, X-Ray Protector, High Voltage and Focus adjustments.**
- **Ensure that CN0RD and CN00R on the S. Correction PWB are connected to the Deflection yoke and Main PWB.**

(1) Set the **VR504** and **VR505** on S. CORRECTION PWB into the position of a center.
(2) Apply the 1080/60i crosshatch signal with circle pattern to INPUT A (Terminal Y on the Component/RGB Input Card).
(3) Turn the **VR504** to optimize the horizontal convergence value at the center of the screen (turning the potentiometer counterclockwise shifts BLUE toward the right with respect to RED).
(4) Turn the **VR505** to optimize the vertical convergence value at the center of the screen (turning the potentiometer counterclockwise shifts BLUE downward with respect to RED).

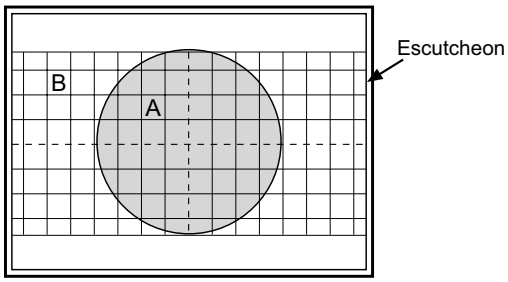

	Area A	Area B
Aberration of color	≤ 0.25mm	≤ 0.35mm

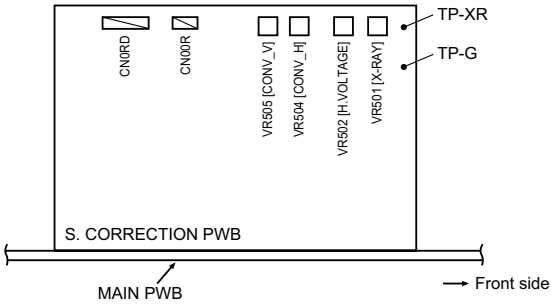

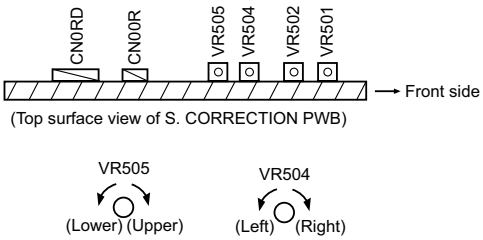

1.10.8 CONTRAST ADJUSTMENTS

CONTRAST ADJUSTMENT (HDTV)	
Measuring Instruments	**Signal generator (Crosshatch signal)** **Oscilloscope**
Card (Slot)	**Component/RGB Input Card (Slot 1)**
Test Points	**TP-47G [CRT SOCKET PWB]** **TP-GND [CRT SOCKET PWB]**
Adjustment Points	**S*01 (Contrast) [Service Menu]**

Notes:

- **Perform the following adjustments after completing the Screen Voltage Coarse adjustment.**
- **Set the CONTRAST data in the Setup Menu to "00".**
- **The value adjusted at the SR adjustment becomes the reference value for the following adjustments. When this data is changed, it is required to re-adjust the data of all of the adjustment signals (HDTV, SDTV and NTSC/PAL). When re-adjusting the 1080/60i signal, use the SI.**

– Standard value (SR) adjustment –

(1) Apply the 1080/60i crosshatch signal to INPUT A (Terminal Y on the Component/RGB Input Card).
(2) Set the CONTRAST potentiometer on the front panel to the center click position.
(3) Connect the oscilloscope across TP-47G and TP-GND.
(4) Adjust **SR01** in the Service Menu to set the voltage amplitude < A > in the figure on the right to the voltage shown in the Table 1.

– Other signals adjustments –

(1) Apply the 1080/60i crosshatch signal to INPUT A (Terminal Y on the Component/RGB Input Card).
(2) Set the CONTRAST potentiometer on the front panel to the center click position.
(3) Connect the oscilloscope across TP-47G and TP-GND.
(4) Adjust **SI01** in the Service Menu to set the voltage amplitude < A > in the figure on the right to the voltage shown in the Table 1.
(5) Vary the adjustment signal and adjustment data, and re-perform adjustments in steps 5 to 8 above (see Table 1).

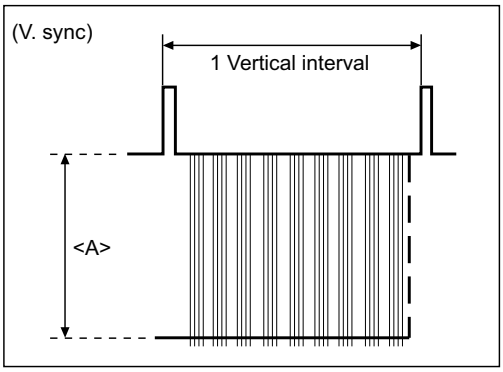

Adjustment Signal	Adjustment Data	Adjustment Voltage <A>
COMMON(1080/60i)	SR1	30 V ± 2 V
1080/60i	SI01	30 V ± 2 V
1080/50i	SK01	32 V ± 2 V
1080/24spF	SL01	33 V ± 2 V
720/60p	SM01	32 V ± 2 V
720/50p	SN01	32 V ± 2 V

Table 1

CONTRAST ADJUSTMENT (SDTV)	
Measuring Instruments	**Signal generator (Crosshatch signal)** **Oscilloscope**
Card (Slot)	**Component/RGB Input Card (Slot 1)**
Test Points	**TP-47G [CRT SOCKET PWB]** **TP-GND [CRT SOCKET PWB]**
Adjustment Points	**S*01 (Contrast) [Service Menu]**

Notes:

- **Perform the following adjustments after completing the 1080/60i signal Contrast adjustment.**
- **Set the CONTRAST data in the Setup Menu to "00".**
- **The SR value (see the description of the HDTV Contrast Adjustment) becomes the reference value for the following adjustments. When this data is changed, it is required to re-adjust the data of all of the adjustment signals (HDTV, SDTV and NTSC/PAL). When re-adjusting the 1080/60i signal, use the SI.**

(1) Apply the 480/60i crosshatch signal to INPUT A (Terminal Y on the Component/RGB Input Card).
(2) Set the CONTRAST potentiometer on the front panel to the center click position.
(3) Connect the oscilloscope across TP-47G and TP-GND.
(4) Adjust **SE01** in the Service Menu to set the voltage amplitude < A > in the figure on the right to the voltage shown in the Table2.
(5) Vary the adjustment signal and adjustment data, and re-perform adjustments in steps 1 to 4 above (see Table 2).

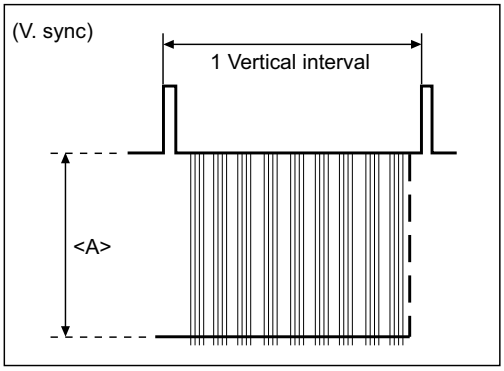

Adjustment Signal	Adjustment Data	Adjustment Voltage <A>
480/60i	SE01	36 V ± 2 V
576/50i	SF01	36 V ± 2 V
480/60p	SG01	35 V ± 2 V
576/50p	SH01	35 V ± 2 V

Table 2

CONTRAST ADJUSTMENT (NTSC/PAL VIDEO)	
Measuring Instruments	**Signal generator (Crosshatch signal)** **Oscilloscope**
Card (Slot)	**NTSC/PAL Video Input Card (Slot 2)**
Test Points	**TP-47G [CRT SOCKET PWB]** **TP-GND [CRT SOCKET PWB]**
Adjustment Points	**S*01 (Contrast) [Service Menu]**

Notes:

- **Ensure that the output waveforms from the NTSC/PAL Video Input Cards are normal before proceeding to the following adjustments.**
- **Perform the following adjustments after completing the 1080/60i signal Contrast Adjustment.**
- **Set the CONTRAST data in the Setup Menu to "00".**
- **The SO value (see the description of the HDTV Contrast Adjustment) becomes the reference value for the following adjustments. When this data is changed, it is required to re-adjust the data of all of the adjustment signals (HDTV, SDTV and NTSC/PAL). When re-adjusting the 1080/60i signal, use the SI. (For the adjustment of the 1080/60i signal, use the Component/RGB Input Card.)**

(1) Apply the NTSC crosshatch signal to INPUT C (Terminal VIDEO1 on the NTSC/PAL Video Input Card).
(2) Set the CONTRAST potentiometer on the front panel to the center click position.
(3) Connect the oscilloscope across TP-47G and TP-GND.
(4) Adjust **SA01** in the Service Menu to set the voltage amplitude < A > in the figure on the right to the voltage shown in the Table 3.
(5) Vary the adjustment signal and adjustment data, and re-perform adjustments in steps 1 to 4 above (see Table 3).

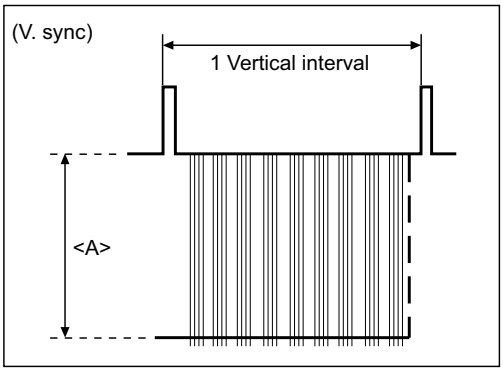

Adjustment Signal	Adjustment Data	Adjustment Voltage <A>
NTSC (VIDEO)	SA01	36 V ± 2 V
PAL (VIDEO)	SC01	36 V ± 2 V

Table 3

CONTRAST ADJUSTMENT (NTSC/PAL Y/C)	
Measuring Instruments	**Signal generator (Crosshatch signal)** **Oscilloscope**
Card (Slot)	**NTSC/PAL Video Input Card (Slot 2)**
Test Points	**TP-47G [CRT SOCKET PWB]** **TP-GND [CRT SOCKET PWB]**
Adjustment Points	**S*01 (Contrast) [Service Menu]**

Notes:

- **Ensure that the output waveforms from the NTSC/PAL Video Input Cards are normal before proceeding to the following adjustments.**
- **Perform the following adjustments after completing the 1080/60i signal Contrast Adjustment.**
- **Set the CONTRAST data in the Setup Menu to "00".**
- **The SO value (see the description of the HDTV Contrast Adjustment) becomes the reference value for the following adjustments. When this data is changed, it is required to re-adjust the data of all of the adjustment signals (HDTV, SDTV and NTSC/PAL). When re-adjusting the 1080/60i signal, use the SI. (For the adjustment of the 1080/60i signal, use the Component/RGB Input Card.)**

(1) Apply the NTSC crosshatch signal to INPUT D (Terminal Y/C on the NTSC/PAL Video Input Card).
(2) Set the CONTRAST potentiometer on the front panel to the center click position.
(3) Connect the oscilloscope across TP-47G and TP-GND.
(4) Adjust **SB01** in the Service Menu to set the voltage amplitude < A > in the figure on the right to the voltage shown in the Table 4.
(5) Vary the adjustment signal and adjustment data, and re-perform adjustments in steps 1 to 4 above (see Table 4).

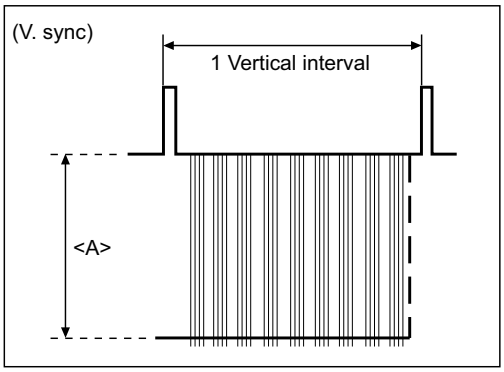

Adjustment Signal	Adjustment Data	Adjustment Voltage <A>
NTSC (Y/C)	SB01	36 V ± 2 V
PAL (Y/C)	SD01	36 V ± 2 V

Table 4

1.10.9 CHROMA/PHASE ADJUSTMENTS

CHROMA/PHASE ADJUSTMENTS (COMPONENT)	
Measuring Instruments	**Signal generator (Color bar signal)** **Oscilloscope**
Card (Slot)	**Component/RGB Input Card (Slot 1)**
Test Points	**TP-47B [CRT SOCKET PWB]** **TP-GND [CRT SOCKET PWB]**
Adjustment Points	**S*03 (Chroma), S*04 (Phase) [Service Menu]**

Notes:

- **Perform the following adjustments after completing the Contrast adjustment.**
- **Set the CHROMA and PHASE data in the Setup Menu to "00".**
- **The value adjusted at the SR adjustment becomes the reference value for the following adjustments. When this data is changed, it is required to re-adjust the data of all of the adjustment signals (Component, NTSC and PAL). When re-adjusting the 1080/60i signal, use the SI.**

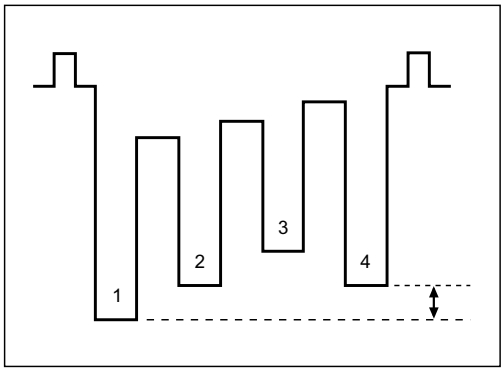

(1) Apply the 1080/60i component color bar signal to INPUT A.
(2) Set the CHROMA and PHASE potentiometers on the front panel to the center click positions.
(3) Connect the oscilloscope across TP-47B and TP-GND.
(4) Adjust **SR03** in the Service Menu to set the level difference between waveforms 1 and 4 in the figure on the right to **0 V ± 2 V**.
(5) Adjust **SR04** to set the level difference between 1 and 3 to 0 **V ± 2 V**.
(6) Vary the adjustment signal and adjustment data, and re-perform adjustments in steps 1 to 5 above (see Table 5).

Adjustment Signal	Adjustment Data	
	Chroma	Phase
COMMON	SR03	SR04
1080/60i	SI03	SI04
1080/50i	SK03	SK04
1080/24psF	SL03	SL04
720/60p	SM03	SM04
720/50p	SN03	SN04
480/60i	SE03	SE04
576/50i	SF03	SF04
480/60p	SG03	SG04
576/50p	SH03	SH04

Table 5

CHROMA/PHASE ADJUSTMENTS (NTSC)	
Measuring Instruments	**Signal generator (Color bar signal)** **Oscilloscope**
Card (Slot)	**NTSC/PAL Video Input Card (Slot 2)**
Test Points	**TP-47B [CRT SOCKET PWB]** **TP-GND [CRT SOCKET PWB]**
Adjustment Points	**S*03 (Chroma), S*04 (Phase) [Service Menu]**

Notes:

- **Ensure that the output waveforms from the NTSC/PAL Video Input Cards are normal before proceeding to the following adjustments.**
- **Perform the following adjustments after completing the 1080/60i signal Chroma/Phase Adjustments.**
- **Set the CHROMA and PHASE data in the Setup Menu to "00".**
- **The SR value (see the description of the Component Signal Chroma/Phase Adjustments) becomes the reference value for the following adjustments. When this data is changed, it is required to re-adjust the data of all of the adjustment signals (Component, NTSC and PAL).**
  When re-adjusting the 1080/60i signal, use the SI. (For the adjustment of the 1080/60i signal, use the Component/RGB Input Card.)

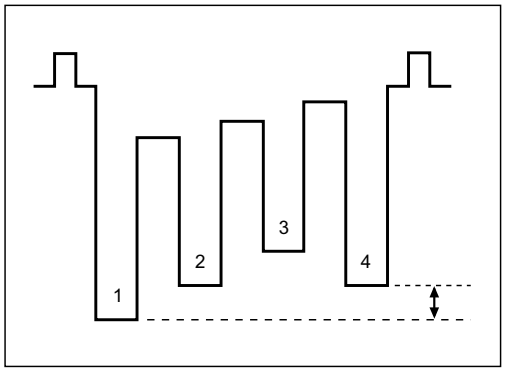

(1) Apply the NTSC 75% color bar signal to INPUT C (Terminal VIDEO1 on the NTSC/PAL Video Input Card).
(2) Set the CHROMA and PHASE potentiometers on the front panel to the center click positions.
(3) Connect the oscilloscope across TP-47B and TP-GND.
(4) Adjust **SA03** in the Service Menu to set the level difference between waveforms 1 and 4 in the figure on the right to **0 V ± 2 V**.
(5) Adjust **SA04** to set the level difference between 1 and 3 to **0 V ± 2 V**.
(6) Apply the NTSC 75% color bar signal to INPUT D (Terminal Y/C on the NTSC/PAL Video Input Card) and perform the adjustments in steps 2 to 5 above. See Table 6 for the adjustment data.

Adjustment Signal	Adjustment Data	
	Chroma	Phase
NTSC (VIDEO)	SA03	SA04
NTSC (Y/C)	SB03	SB04

Table 6

CHROMA ADJUSTMENTS (PAL)	
Measuring Instruments	**Signal generator (Color bar signal)** **Oscilloscope**
Card (Slot)	**NTSC/PAL Video Input Card (Slot 2)**
Test Points	**TP-47B [CRT SOCKET PWB]** **TP-GND [CRT SOCKET PWB]**
Adjustment Points	**S*03 (Chroma) [Service Menu]**

Notes:

- **Ensure that the output waveforms from the NTSC/PAL Video Input Cards are normal before proceeding to the following adjustments.**
- **Perform the following adjustments after completing the 1080/60i signal Chroma/Phase Adjustments.**
- **Set the CHROMA and PHASE data in the Setup Menu to "00".**
- **The SR value (see the description of the Component Signal Chroma/Phase Adjustments) becomes the reference value for the following adjustments. When this data is changed, it is required to re-adjust the data of all of the adjustment signals (Component, NTSC and PAL).**
  When re-adjusting the 1080/60i signal, use the SI. (For the adjustment of the 1080/60i signal, use the Component/RGB Input Card.)

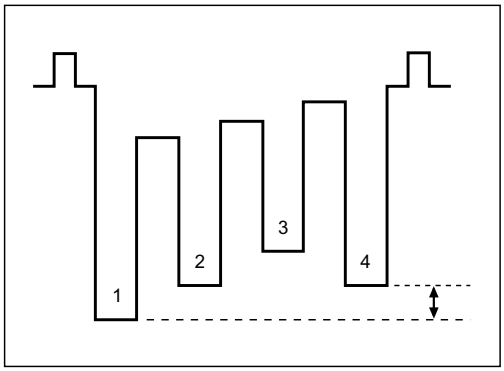

(1) Apply the PAL 75% color bar signal to INPUT C (Terminal VIDEO1 on the NTSC/PAL Video Input Card).
(2) Set the CHROMA and PHASE potentiometers on the front panel to the center click positions.
(3) Connect the oscilloscope across TP-47B and TP-GND.
(4) Adjust **SC03** in the Service Menu to set the level difference between waveforms 1 and 4 in the figure on the right to **0 V ± 2 V**.
(5) Apply the PAL 75% color bar signal to INPUT D (Terminal Y/C on the NTSC/PAL Video Input Card) and perform the adjustments in steps 2 to 4 above. See Table 7 for the adjustment data.

Adjustment Signal	Adjustment Data
	Chroma
PAL (VIDEO)	SC03
PAL (Y/C)	SD03

Table 7

1.10.10 DEFLECTION SYSTEM ADJUSTMENTS

HORIZONTAL/VERTICAL IMAGE POSITION, IMAGE AMPLITUDE AND IMAGE DISTORTION ADJUSTMENTS (HDTV OVERSCAN MODE)	
Measuring Instruments	**Signal generator (Size adjustment signal, Crosshatch signal)**
Card (Slot)	**Component/RGB Input Card (Slot 1)**
Test Points	
Adjustment Points	**D*01 (Horizontal Size), D*02 (Vertical Size), D*03 (Horizontal Position), D*04 (Vertical Position), D*05 (Side Pin Distortion), D*06 (Corner Distortion (W)), D*07 (Corner Distortion (S)), D*08 (Parallelogram Distortion), D*09 (Trapezoidal Distortion), D*10 (Horizontal Arc Distortion), D*11 (Vertical Linearity (S Correction)), D*12 (Vertical Linearity (C Correction)) [Service Menu]**

(1) Apply the 1080/60i size adjustment signal to INPUT A (Terminal Y on the Component/RGB Input Card).
(2) Set the CONTRAST and BRIGHT potentiometers on the front panel to the center click positions.
(3) Adjust **DM04** in the Service Menu to set the vertical position of the image at the center of the CRT screen.
(4) Adjust **DM02** to set the vertical amplitude of the image to **193mm**.
(5) Apply the 1080/60i crosshatch signal to INPUT A.
(6) Adjust **DM11** to set the sizes of the rectangles at the center of the image and those at the left and right ends to be identical.
(7) Adjust **DM12** to set the sizes of the rectangles at the center of the image and those at the top and bottom to be identical.
(8) Ensure that the center position is not deviated. If it is, adjust DM04 again.
(9) Adjust **DM11**, **DM12** and **DM04** repeatedly until the center position and vertical linearity are optimized.
(10) Adjust **DM09** to optimize the trapezoidal distortion (observe the second vertical lines from the left and right edges as the reference).
(11) Adjust **DM08** to optimize the parallelogram distortion (observe the second vertical lines from the left and right edges as the reference).
(12) Adjust **DM10** to optimize the horizontal arc distortion.
(13) Adjust **DM05** so that the second vertical lines from the left and right edges are linear.
(14) If there is an extreme corner S-shape distortion, adjust **DM07** to optimize it (this adjustment is usually unnecessary).
(15) If there is an extreme corner W-shape distortion, adjust **DM06** to optimize it (this adjustment is usually unnecessary).
(16) Apply the 1080/60i size adjustment signal to INPUT A.
(17) Ensure that the vertical amplitude of the image is **193mm**. If it is not, adjust **DM02** again.
(18) Adjust **DM03** so that the horizontal position of the image comes at the center of the CRT screen.
(19) Adjust the horizontal image amplitude with **DM01** to match the 95% line of the size adjustment signal onto the edge of the escutcheon.
(20) Vary the adjustment signal and adjustment data, and re-perform adjustments in steps 1 to 19 above (see Table 8).

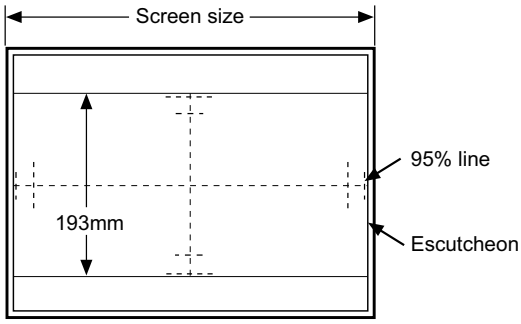

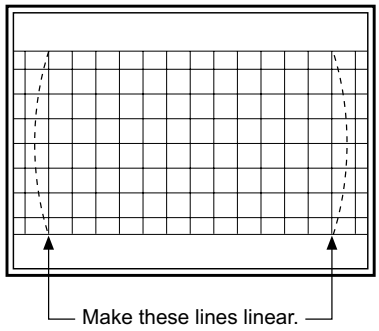

Adjustment Step No.	Adjustment signal	Adjustment Data
1	1080/60i	DM
2	1080/50i	DQ
3	1080/24psF	DS
4	720/60p	DU
5	720/50p	DW

Table 8

HORIZONTAL/VERTICAL IMAGE POSITION, IMAGE AMPLITUDE AND IMAGE DISTORTION ADJUSTMENTS (HDTV UNDERSCAN MODE)	
Measuring Instruments	**Signal generator (Size adjustment signal, Crosshatch signal)**
Card (Slot)	**Component/RGB Input Card (Slot 1)**
Test Points	
Adjustment Points	**D*01 (Horizontal Size), D*02 (Vertical Size), D*03 (Horizontal Position), D*04 (Vertical Position), D*05 (Side Pin Distortion), D*06 (Corner Distortion (W)), D*07 (Corner Distortion (S)), D*08 (Parallelogram Distortion), D*09 (Trapezoidal Distortion), D*10 (Horizontal Arc Distortion), D*11 (Vertical Linearity (S Correction)), D*12 (Vertical Linearity (C Correction)) [Service Menu]**

Note:

- **Perform the following adjustments after completing the Reference Mode (HDTV overscan mode) adjustments.**

(1) Apply the 1080/60i size adjustment signal to INPUT A (Terminal Y on the Component/RGB Input Card).
(2) Set the CONTRAST and BRIGHT potentiometers on the front panel to the center click positions.
(3) Press the UNDER SCAN button on the front panel to set the scanning size to underscanning.
(4) Adjust **DN04** in the Service Menu to set the vertical position of the image at the center of the CRT screen.
(5) Adjust **DN02** to set the vertical amplitude of the image to **175mm**.
(6) Apply the 1080/60i crosshatch signal to INPUT A.
(7) Adjust **DN11** to set the sizes of the rectangles at the center of the image and those at the left and right ends to be identical.
(8) Adjust **DN12** to set the sizes of the rectangles at the center of the image and those at the top and bottom to be identical.
(9) Ensure that the center position is not deviated. If it is, adjust **DN04** again.
(10) Adjust **DN11**, **DN12** and **DN04** repeatedly until the center position and vertical linearity are optimized.
(11) Adjust **DN09** to optimize the trapezoidal distortion (observe the second vertical lines from the left and right edges as the reference).
(12) Adjust **DN08** to optimize the parallelogram distortion (observe the second vertical lines from the left and right edges as the reference).
(13) Adjust **DN10** to optimize the horizontal arc distortion.
(14) Adjust **DN05** so that the second vertical lines from the left and right edges are linear.
(15) If there is an extreme corner S-shape distortion, adjust **DN07** to optimize it (this adjustment is usually unnecessary).
(16) If there is an extreme corner W-shape distortion, adjust **DN06** to optimize it (this adjustment is usually unnecessary).
(17) Apply the 1080/60i size adjustment signal to INPUT A.
(18) Ensure that the vertical amplitude of the image is **175mm**. If it is not, adjust **DN02** again.
(19) Adjust **DN03** so that the horizontal position of the image comes at the center of the CRT screen.
(20) Adjust **DN01** to set the horizontal amplitude of the image to **311mm**.
(21) Vary the adjustment signal and adjustment data, and re-perform adjustments in steps 1 to 20 above (see Table 9).

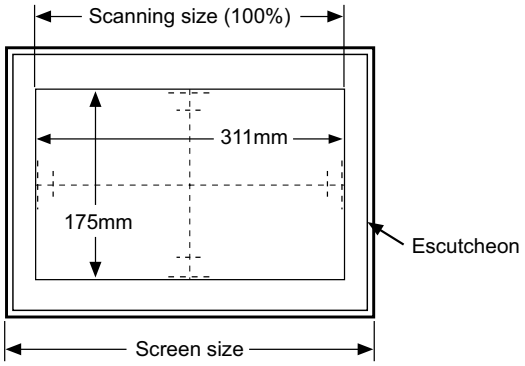

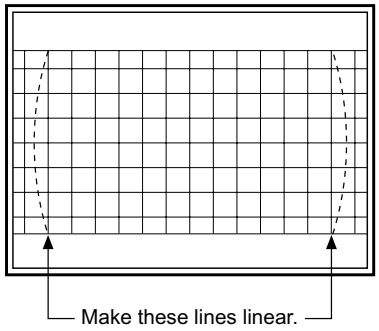

Adjustment Step No.	Adjustment signal	Adjustment Data
1	1080/60i	DN
2	1080/50i	DR
3	1080/24psF	DT
4	720/60p	DV
5	720/50p	DX

Table 9

HORIZONTAL/VERTICAL IMAGE POSITION, IMAGE AMPLITUDE AND IMAGE DISTORTION ADJUSTMENTS (SDTV OVERSCAN 4:3 MODE)	
Measuring Instruments	**Signal generator (Size adjustment signal, Crosshatch signal)**
Card (Slot)	**Component/RGB Input Card (Slot 1)**
Test Points	
Adjustment Points	**D*01 (Horizontal Size), D*02 (Vertical Size), D*03 (Horizontal Position), D*04 (Vertical Position), D*05 (Side Pin Distortion), D*06 (Corner Distortion (W)), D*07 (Corner Distortion (S)), D*08 (Parallelogram Distortion), D*09 (Trapezoidal Distortion), D*10 (Horizontal Arc Distortion), D*11 (Vertical Linearity (S Correction)), D*12 (Vertical Linearity (C Correction)) [Service Menu]**

(1) Apply the 480/60i size adjustment signal to INPUT A (Terminal Y on the Component/RGB Input Card).
(2) Set the CONTRAST and BRIGHT potentiometers on the front panel to the center click positions.
(3) Adjust **DE04** in the Service Menu to set the vertical position of the image at the center of the CRT screen.
(4) Adjust the vertical image amplitude with **DE02** to match the 95% line of the size adjustment signal onto the edge of the escutcheon.
(5) Apply the 480/60i crosshatch signal to INPUT A.
(6) Adjust **DE11** to set the sizes of the rectangles at the center of the image and those at the left and right ends to be identical.
(7) Adjust **DE12** to set the sizes of the rectangles at the center of the image and those at the top and bottom to be identical.
(8) Ensure that the center position is not deviated. If it is, adjust **DE04** again.
(9) Adjust **DE11**, **DE12** and **DE04** repeatedly until the center position and vertical linearity are optimized.
(10) Adjust **DE09** to optimize the trapezoidal distortion (observe the second vertical lines from the left and right edges as the reference).
(11) Adjust **DE08** to optimize the parallelogram distortion (observe the second vertical lines from the left and right edges as the reference).
(12) Adjust **DE10** to optimize the horizontal arc distortion.
(13) Adjust **DE05** so that the second vertical lines from the left and right edges are linear.
(14) If there is an extreme corner S-shape distortion, adjust **DE07** to optimize it (this adjustment is usually unnecessary).
(15) If there is an extreme corner W-shape distortion, adjust **DE06** to optimize it (this adjustment is usually unnecessary).
(16) Apply the 480/60i size adjustment signal to INPUT A.
(17) Observe the vertical amplitude of the image. If it is dislocated, adjust **DE02** again.
(18) Adjust **DE03** so that the horizontal position of the image comes at the center of the CRT screen.
(19) Adjust the horizontal image amplitude with **DE01** to match the 95% line of the size adjustment signal onto the edge of the escutcheon.
(20) Vary the adjustment signal and adjustment data, and re-perform adjustments in steps 1 to 19 above (see Table 10).

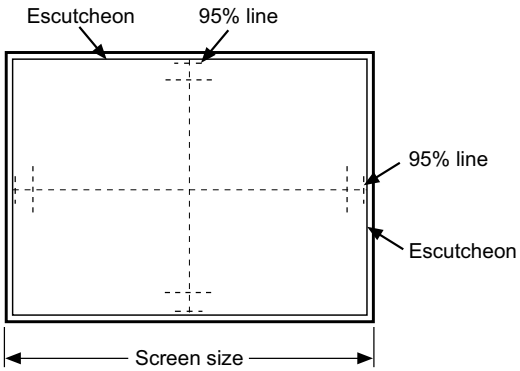

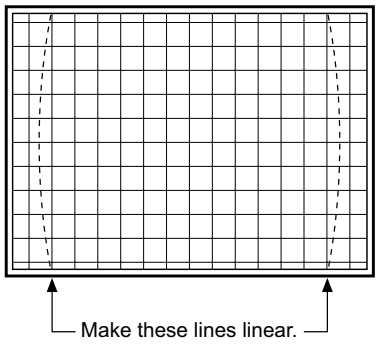

Adjustment Step No.	Adjustment signal	Adjustment Data
1	480/60i	DE
2	480/60p	DI
3	576/50i	DG
4	576/50p	DK

Table 10

HORIZONTAL/VERTICAL IMAGE POSITION, IMAGE AMPLITUDE AND IMAGE DISTORTION ADJUSTMENTS (SDTV UNDERSCAN 4:3 MODE)	
Measuring Instruments	**Signal generator (Size adjustment signal, Crosshatch signal)**
Card (Slot)	**Component/RGB Input Card (Slot 1)**
Test Points	
Adjustment Points	**D*01 (Horizontal Size), D*02 (Vertical Size), D*03 (Horizontal Position), D*04 (Vertical Position), D*05 (Side Pin Distortion), D*06 (Corner Distortion (W)), D*07 (Corner Distortion (S)), D*08 (Parallelogram Distortion), D*09 (Trapezoidal Distortion), D*10 (Horizontal Arc Distortion), D*11 (Vertical Linearity (S Correction)), D*12 (Vertical Linearity (C Correction)) [Service Menu]**

Note:

- **Perform the following adjustments after completing the Reference Mode (SDTV overscan 4:3 mode) adjustments.**

(1) Apply the 480/60i size adjustment signal to INPUT A (Terminal Y on the Component/RGB Input Card).
(2) Set the CONTRAST and BRIGHT potentiometers on the front panel to the center click positions.
(3) Press the UNDER SCAN button on the front panel to set the scanning size to underscanning.
(4) Adjust **DF04** in the Service Menu to set the vertical position of the image at the center of the CRT screen.
(5) Adjust **DF02** to set the vertical amplitude of the image to **233mm**.
(6) Apply the 480/60i crosshatch signal to INPUT A.
(7) Adjust **DF11** to set the sizes of the rectangles at the center of the image and those at the left and right ends to be identical.
(8) Adjust **DF12** to set the sizes of the rectangles at the center of the image and those at the top and bottom to be identical.
(9) Ensure that the center position is not deviated. If it is, adjust **DF04** again.
(10) Adjust **DF11**, **DF12** and **DF04** repeatedly until the center position and vertical linearity are optimized.
(11) Adjust **DF09** to optimize the trapezoidal distortion (observe the second vertical lines from the left and right edges as the reference).
(12) Adjust **DF08** to optimize the parallelogram distortion (observe the second vertical lines from the left and right edges as the reference).
(13) Adjust **DF10** to optimize the horizontal arc distortion.
(14) Adjust **DF05** so that the second vertical lines from the left and right edges are linear.
(15) If there is an extreme corner S-shape distortion, adjust **DF07** to optimize it (this adjustment is usually unnecessary).
(16) If there is an extreme corner W-shape distortion, adjust **DF06** to optimize it (this adjustment is usually unnecessary).
(17) Apply the 480/60i size adjustment signal to INPUT A.
(18) Ensure that the vertical amplitude of the image is **233mm**. If it is not, adjust **DF02** again.
(19) Adjust **DF03** so that the horizontal position of the image comes at the center of the CRT screen.
(20) Adjust **DF01** to set the horizontal amplitude of the image to **311mm**.
(21) Vary the adjustment signal and adjustment data, and re-perform adjustments in steps 1 to 20 above (see Table 11).

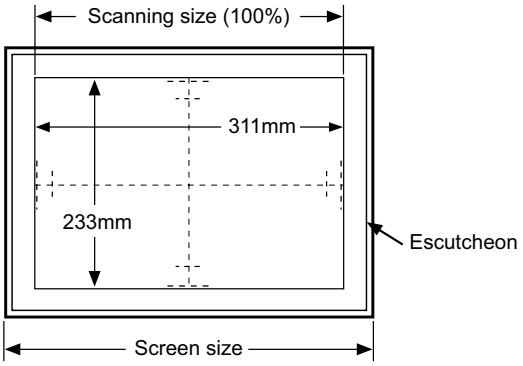

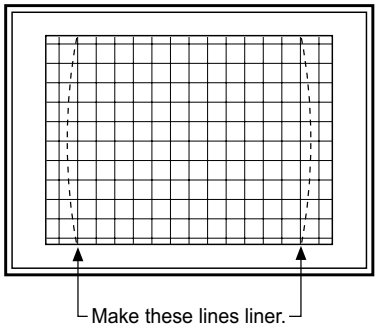

Adjustment Step No.	Adjustment signal	Adjustment Data
1	480/60i	DF
2	480/60p	DJ
3	576/50i	DH
4	576/50p	DL

Table 11

VERTICAL IMAGE POSITION, IMAGE AMPLITUDE AND IMAGE DISTORTION ADJUSTMENTS (SDTV OVERSCAN 16:9 MODE)	
Measuring Instruments	**Signal generator (Size adjustment signal, Crosshatch signal)**
Card (Slot)	**Component/RGB Input Card (Slot 1)**
Test Points	
Adjustment Points	**DY** (Vertical Size), DY** (Vertical Position), DY** (Side Pin Distortion), CE** (Corner Distortion (W)), CE** (Corner Distortion (S)), CE** (Parallelogram Distortion), CE** (Trapezoidal Distortion), CE** (Horizontal Arc Distortion) [Service Menu]**

Notes:

- **Perform the following adjustments after completing the Reference Mode (SDTV overscan 4:3 mode) adjustments.**
- **The corner distortions (W) & (S), parallelogram distortion, trapezoidal distortion and horizontal arc distortion adjustment data for this adjustment are common to those in the SDTV overscan 16:9 mode and the SDTV underscan 16:9 mode adjustments. This adjustment data needs to be adjusted in either mode.**
- **The corner distortions (W) & (S), parallelogram distortion, trapezoidal distortion and horizontal arc distortion adjustment data for this adjustment are common to those in the 480/60i and NTSC signal or 576/50i and PAL signal adjustments. This adjustment data needs to be adjusted with either signal.**

(1) Apply the 480/60i size adjustment signal to INPUT A (Terminal Y on the Component/RGB Input Card).
(2) Press the ASPECT button on the front panel to set the scanning size to 16:9 mode.
(3) Set the CONTRAST and BRIGHT potentiometers on the front panel to the center click positions.
(4) Adjust **DY14** in the Service Menu to set the vertical position of the image at the center of the CRT screen.
(5) Adjust **DY13** to set the vertical amplitude of the image to **193mm**.
(6) Apply the 480/60i crosshatch signal to INPUT A.
(7) Adjust **CE08** to optimize the trapezoidal distortion (observe the second vertical lines from the left and right edges as the reference).
(8) Adjust **CE07** to optimize the parallelogram distortion (observe the second vertical lines from the left and right edges as the reference).
(9) Adjust **CE09** to optimize the horizontal arc distortion.
(10) Adjust **DY15** so that the second vertical lines from the left and right edges are linear.
(11) If there is an extreme corner S-shape distortion, adjust **CE06** to optimize it (this adjustment is usually unnecessary).
(12) If there is an extreme corner W-shape distortion, adjust **CE05** to optimize it (this adjustment is usually unnecessary).
(13) Apply the 480/60i size adjustment signal to INPUT A.
(14) Ensure that the vertical amplitude of the image is **193mm**. If it is not, adjust **DY13** again.
(15) Adjust **DY14** so that the vertical position of the image comes at the center of the CRT screen.
(16) Vary the adjustment signal and adjustment data, and re-perform adjustments in steps 1 to 15 above (see Table 12).

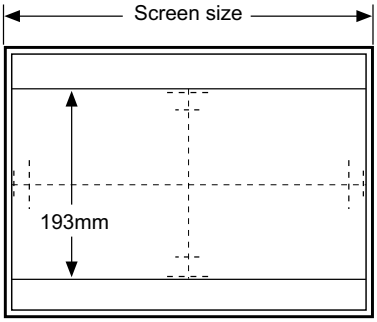

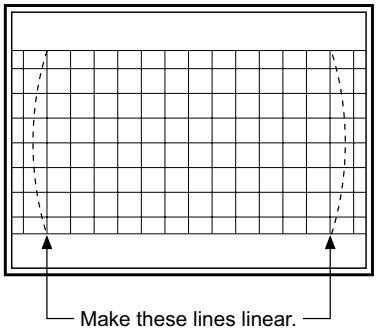

Adjustment Step No.	Adjustment Signal	Adjustment Data							
		Vertical Position	Vertical size	Side Pin Distortion	Corner Distortion (W)	Corner Distortion (S)	Parallelogram Distortion	Trapezoidal Distortion	Horizontal Arc Distortion
1	480/60i	DY14	DY13	DY15	CE05	CE06	CE07	CE08	CE09
2	480/60p	DY26	DY25	DY27	CE15	CE16	CE17	CE18	CE19
3	576/50i	DY20	DY19	DY21	CE10	CE11	CE12	CE13	CE14
4	576/50p	DY32	DY31	DY33	CE20	CE21	CE22	CE23	CE24

Table 12

VERTICAL IMAGE POSITION, IMAGE AMPLITUDE AND IMAGE DISTORTION ADJUSTMENTS (SDTV UNDERSCAN 16:9 MODE)	
Measuring Instruments	**Signal generator (Size adjustment signal, Crosshatch signal)**
Card (Slot)	**Component/RGB Input Card (Slot 1)**
Test Points	
Adjustment Points	**DY** (Vertical Size), DY** (Vertical Position), DY** (Side Pin Distortion), CE** (Corner Distortion (W)), CE** (Corner Distortion (S)), CE** (Parallelogram Distortion), CE** (Trapezoidal Distortion), CE** (Horizontal Arc Distortion) [Service Menu]**

Notes:

- **Perform the following adjustments after completing the Reference Mode (SDTV overscan 4:3 mode) and SDTV underscan 4:3 mode adjustments.**
- **The corner distortions (W) & (S), parallelogram distortion, trapezoidal distortion and horizontal arc distortion adjustment data for this adjustment are common to those in the SDTV overscan 16:9 mode and the SDTV underscan 16:9 mode adjustments. This adjustment data needs to be adjusted in either mode.**
- **The corner distortions (W) & (S), parallelogram distortion, trapezoidal distortion and horizontal arc distortion adjustment data for this adjustment are common to those in the 480/60i and NTSC signal or 576/50i and PAL signal adjustments. This adjustment data needs to be adjusted with either signal.**

(1) Apply the 480/60i size adjustment signal to INPUT A (Terminal Y on the Component/RGB Input Card).
(2) Press the ASPECT and UNDER SCAN buttons on the front panel to set the scanning size to underscanning for the 16:9 ratio.
(3) Set the CONTRAST and BRIGHT potentiometers on the front panel to the center click positions.
(4) Adjust **DY17** in the Service Menu to set the vertical position of the image at the center of the CRT screen.
(5) Adjust **DY16** to set the vertical amplitude of the image to **175mm**.
(6) Apply the 480/60i crosshatch signal to INPUT A.
(7) Adjust **CE08** to optimize the trapezoidal distortion (observe the second vertical lines from the left and right edges as the reference).
(8) Adjust **CE07** to optimize the parallelogram distortion (observe the second vertical lines from the left and right edges as the reference).
(9) Adjust **CE09** to optimize the horizontal arc distortion.
(10) Adjust **DY18** so that the second vertical lines from the left and right edges are linear.
(11) If there is an extreme corner S-shape distortion, adjust **CE06** to optimize it (this adjustment is usually unnecessary).
(12) If there is an extreme corner W-shape distortion, adjust **CE05** to optimize it (this adjustment is usually unnecessary).
(13) Apply the 480/60i size adjustment signal to INPUT A.
(14) Ensure that the vertical amplitude of the image is **175mm**. If it is not, adjust **DY16** again.
(15) Adjust **DY17** so that the vertical position of the image comes at the center of the CRT screen.
(16) Vary the adjustment signal and adjustment data, and re-perform adjustments in steps 1 to 15 above (see Table 13).

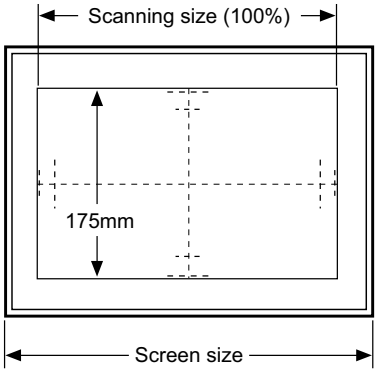

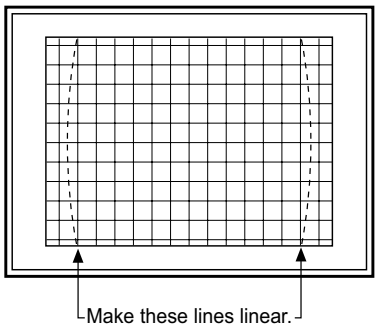

Adjustment Step No.	Adjustment Signal	Adjustment Data							
		Vertical Position	Vertical size	Side Pin Distortion	Corner Distortion (W)	Corner Distortion (S)	Parallelogram Distortion	Trapezoidal Distortion	Horizontal Arc Distortion
1	480/60i	DY17	DY16	DY18	CE05	CE06	CE07	CE08	CE09
2	480/60p	DY29	DY28	DY30	CE15	CE16	CE17	CE18	CE19
3	576/50i	DY23	DY22	DY24	CE10	CE11	CE12	CE13	CE14
4	576/50p	DY35	DY34	DY36	CE20	CE21	CE22	CE23	CE24

Table 13

HORIZONTAL/VERTICAL IMAGE POSITION, IMAGE AMPLITUDE AND IMAGE DISTORTION ADJUSTMENTS (NTSC/PAL OVERSCAN 4:3 MODE)	
Measuring Instruments	**Signal generator (Mono-scope signal, Crosshatch signal)**
Card (Slot)	**NTSC/PAL Video Input Card (Slot 2)**
Test Points	
Adjustment Points	**D*01 (Horizontal Size), D*02 (Vertical Size), D*03 (Horizontal Position), D*04 (Vertical Position), D*05 (Side Pin Distortion), D*06 (Corner Distortion (W)), D*07 (Corner Distortion (S)), D*08 (Parallelogram Distortion), D*09 (Trapezoidal Distortion), D*10 (Horizontal Arc Distortion), D*11 (Vertical Linearity (S Correction)), D*12 (Vertical Linearity (C Correction)) [Service Menu]**

(1) Apply the NTSC mono-scope signal to INPUT C (Terminal VIDEO1 on the NTSC/PAL Video Input Card).
(2) Set the CONTRAST and BRIGHT potentiometers on the front panel to the center click positions.
(3) Adjust **DA04** in the Service Menu to set the vertical position of the image at the center of the CRT screen.
(4) Adjust the vertical image amplitude with **DA02** to match the 95% line of the mono-scope signal onto the edge of the escutcheon.
(5) Apply the NTSC crosshatch signal to INPUT C.
(6) Adjust **DA11** to set the sizes of the rectangles at the center of the image and those at the left and right ends to be identical.
(7) Adjust **DA12** to set the sizes of the rectangles at the center of the image and those at the top and bottom to be identical.
(8) Ensure that the center position is not deviated. If it is, adjust **DA04** again.
(9) Adjust **DA11**, **DA12** and **DA04** repeatedly until the center position and vertical linearity are optimized.
(10) Adjust **DA09** to optimize the trapezoidal distortion (observe the second vertical lines from the left and right edges as the reference).
(11) Adjust **DA08** to optimize the parallelogram distortion (observe the second vertical lines from the left and right edges as the reference).
(12) Adjust **DA10** to optimize the horizontal arc distortion.
(13) Adjust **DA05** so that the second vertical lines from the left and right edges are linear.
(14) If there is an extreme corner S-shape distortion, adjust **DA07** to optimize it (this adjustment is usually unnecessary).
(15) If there is an extreme corner W-shape distortion, adjust **DA06** to optimize it (this adjustment is usually unnecessary).
(16) Apply the NTSC mono-scope signal to INPUT C.
(17) Observe the vertical amplitude of the image. If it is dislocated, adjust **DA02** again.
(18) Adjust **DA03** so that the horizontal position of the image comes at the center of the CRT screen.
(19) Adjust the horizontal image amplitude with **DA01** to match the 95% line of the mono-scope signal onto the edge of the escutcheon.
(20) Vary the adjustment signal and adjustment data, and re-perform adjustments in steps 1 to 19 above (see Table 14).

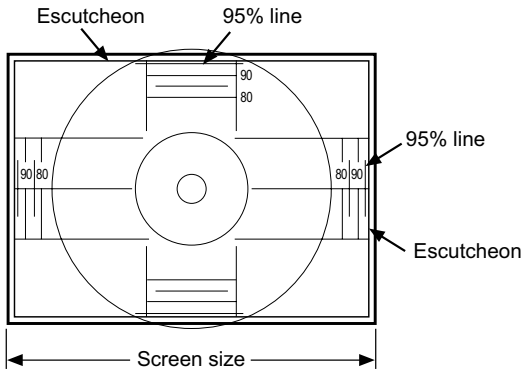

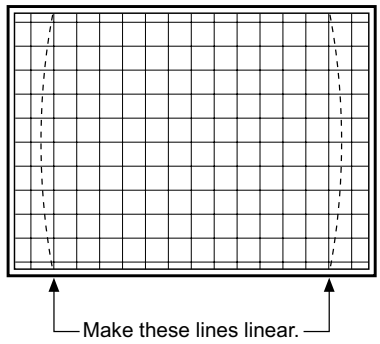

Adjustment Step No.	Adjustment signal	Adjustment Data
1	NTSC	DA
2	PAL	DC

Table 14

HORIZONTAL/VERTICAL IMAGE POSITION, IMAGE AMPLITUDE AND IMAGE DISTORTION ADJUSTMENTS (NTSC/PAL UNDERSCAN 4:3 MODE)	
Measuring Instruments	**Signal generator (Mono-scope signal, Crosshatch signal)**
Card (Slot)	**NTSC/PAL Video Input Card (Slot 2)**
Test Points	
Adjustment Points	**D*01 (Horizontal Size), D*02 (Vertical Size), D*03 (Horizontal Position), D*04 (Vertical Position), D*05 (Side Pin Distortion), D*06 (Corner Distortion (W)), D*07 (Corner Distortion (S)), D*08 (Parallelogram Distortion), D*09 (Trapezoidal Distortion), D*10 (Horizontal Arc Distortion), D*11 (Vertical Linearity (S Correction)), D*12 (Vertical Linearity (C Correction)) [Service Menu]**

Note:

- **Perform the following adjustments after completing the Reference Mode (NTSL/PAL overscan 4:3 mode) adjustments.**

(1) Apply the NTSC mono-scope signal to INPUT C (Terminal VIDEO1 on the NTSC/PAL Video Input Card).
(2) Set the CONTRAST and BRIGHT potentiometers on the front panel to the center click positions.
(3) Press the UNDER SCAN button on the front panel to set the scanning size to underscanning.
(4) Adjust **DB04** in the Service Menu to set the vertical position of the image at the center of the CRT screen.
(5) Adjust **DB02** to set the vertical amplitude of the image to **233mm**.
(6) Apply the NTSC crosshatch signal to INPUT C.
(7) Adjust **DB11** to set the sizes of the rectangles at the center of the image and those at the left and right ends to be identical.
(8) Adjust **DB12** to set the sizes of the rectangles at the center of the image and those at the top and bottom to be identical.
(9) Ensure that the center position is not deviated. If it is, adjust **DB04** again.
(10) Adjust **DB11**, **DB12** and **DB04** repeatedly until the center position and vertical linearity are optimized.
(11) Adjust **DB09** to optimize the trapezoidal distortion (observe the second vertical lines from the left and right edges as the reference).
(12) Adjust **DB08** to optimize the parallelogram distortion (observe the second vertical lines from the left and right edges as the reference).
(13) Adjust **DB10** to optimize the horizontal arc distortion.
(14) Adjust **DB05** so that the second vertical lines from the left and right edges are linear.
(15) If there is an extreme corner S-shape distortion, adjust **DB07** to optimize it (this adjustment is usually unnecessary).
(16) If there is an extreme corner W-shape distortion, adjust **DB06** to optimize it (this adjustment is usually unnecessary).
(17) Apply the NTSC mono-scope signal to INPUT C.
(18) Ensure that the vertical amplitude of the image is **233mm**. If it is not, adjust **DB02** again.
(19) Adjust **DB03** so that the horizontal position of the image comes at the center of the CRT screen.
(20) Adjust **DB01** to set the horizontal amplitude of the image to **311mm**.
(21) Vary the adjustment signal and adjustment data, and re-perform adjustments in steps 1 to 20 above (see Table 15).

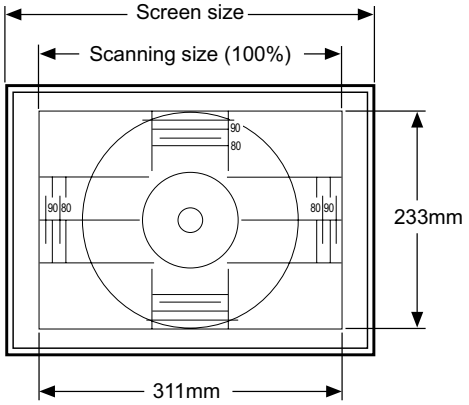

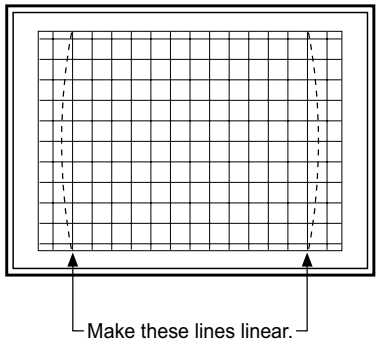

Adjustment Step No.	Adjustment signal	Adjustment Data
1	NTSC	DB
2	PAL	DD

Table 15

VERTICAL IMAGE POSITION, IMAGE AMPLITUDE AND IMAGE DISTORTION ADJUSTMENTS (NTSC/PAL OVERSCAN 16:9 MODE)	
Measuring Instruments	**Signal generator (Mono-scope signal, Crosshatch signal)**
Card (Slot)	**NTSC/PAL Video Input Card (Slot 2)**
Test Points	
Adjustment Points	**DY** (Vertical Size), DY** (Vertical Position), DY** (Side Pin Distortion), CE** (Corner Distortion (W)), CE** (Corner Distortion (S)), CE** (Parallelogram Distortion), CE** (Trapezoidal Distortion), CE** (Horizontal Arc Distortion) [Service Menu]**

Notes:

- **Perform the following adjustments after completing the Reference Mode (NTSL/PAL overscan 4:3 mode) adjustment.**
- **The corner distortions (W) & (S), parallelogram distortion, trapezoidal distortion and horizontal arc distortion adjustment data for this adjustment are common to those in the NTSC/PAL overscan 16:9 mode and the NTSC/PAL underscan 16:9 mode adjustments. This adjustment data needs to be adjusted in either mode.**
- **The corner distortions (W) & (S), parallelogram distortion, trapezoidal distortion and horizontal arc distortion adjustment data for this adjustment are common to those in the 480/60i and NTSC signal or 576/50i and PAL signal adjustments. This adjustment data needs to be adjusted with either signal.**

(1) Apply the NTSC mono-scope signal to INPUT C (Terminal VIDEO1 on the NTSC/PAL Video Input Card).
(2) Press the ASPECT button on the front panel to set the scanning size to 16:9 mode.
(3) Set the CONTRAST and BRIGHT potentiometers on the front panel to the center click positions.
(4) Adjust **DY02** in the Service Menu to set the vertical position of the image at the center of the CRT screen.
(5) Adjust **DY01** to set the vertical amplitude of the image to **193mm**.
(6) Apply the NTSC crosshatch signal to INPUT C.
(7) Adjust **CE08** to optimize the trapezoidal distortion (observe the second vertical lines from the left and right edges as the reference).
(8) Adjust **CE07** to optimize the parallelogram distortion (observe the second vertical lines from the left and right edges as the reference).
(9) Adjust **CE09** to optimize the horizontal arc distortion.
(10) Adjust **DY03** so that the second vertical lines from the left and right edges are linear.
(11) If there is an extreme corner S-shape distortion, adjust **CE06** to optimize it (this adjustment is usually unnecessary).
(12) If there is an extreme corner W-shape distortion, adjust **CE05** to optimize it (this adjustment is usually unnecessary).
(13) Apply the NTSC mono-scope signal to INPUT C.
(14) Ensure that the vertical amplitude of the image is **193mm**. If it is not, adjust **DY01** again.
(15) Adjust **DY02** so that the vertical position of the image comes at the center of the CRT screen.
(16) Vary the adjustment signal and adjustment data, and re-perform adjustments in steps 1 to 15 above (see Table 16).

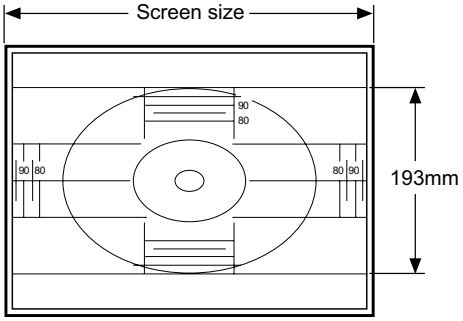

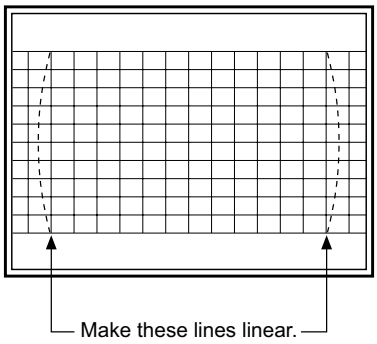

Adjustment Step No.	Adjustment Signal	Adjustment Data							
		Vertical Position	Vertical size	Side Pin Distortion	Corner Distortion (W)	Corner Distortion (S)	Parallelogram Distortion	Trapezoidal Distortion	Horizontal Arc Distortion
1	NTSC	DY02	DY01	DY03	CE05	CE06	CE07	CE08	CE09
2	PAL	DY08	DY07	DY09	CE10	CE11	CE12	CE13	CE14

Table 16

VERTICAL IMAGE POSITION, IMAGE AMPLITUDE AND IMAGE DISTORTION ADJUSTMENTS (NTSC/PAL UNDERSCAN 16:9 MODE)	
Measuring Instruments	**Signal generator (Mono-scope signal, Crosshatch signal)**
Card (Slot)	**NTSC/PAL Video Input Card (Slot 2)**
Test Points	
Adjustment Points	**DY** (Vertical Size), DY** (Vertical Position), DY** (Side Pin Distortion), CE** (Corner Distortion (W)), CE** (Corner Distortion (S)), CE** (Parallelogram Distortion), CE** (Trapezoidal Distortion), CE** (Horizontal Arc Distortion) [Service Menu]**

Notes:

- **Perform the following adjustments after completing the Reference Mode (NTSL/PAL overscan 4:3 mode) and NTSC/PAL underscan 4:3 mode adjustments.**
- **The corner distortions (W) & (S), parallelogram distortion, trapezoidal distortion and horizontal arc distortion adjustment data for this adjustment are common to those in the NTSC/PAL overscan 16:9 mode and the NTSC/PAL underscan 16:9 mode adjustments. This adjustment data needs to be adjusted in either mode.**
- **The corner distortions (W) & (S), parallelogram distortion, trapezoidal distortion and horizontal arc distortion adjustment data for this adjustment are common to those in the 480/60i and NTSC signal or 576/50i and PAL signal adjustments. This adjustment data needs to be adjusted with either signal.**

(1) Apply the NTSC mono-scope signal to INPUT C (Terminal VIDEO1 on the NTSC/PAL Video Input Card).
(2) Press the ASPECT and UNDER SCAN buttons on the front panel to set the scanning size to underscanning for the 16:9 ratio.
(3) Set the CONTRAST and BRIGHT potentiometers on the front panel to the center click positions.
(4) Adjust **DY05** in the Service Menu to set the vertical position of the image at the center of the CRT screen.
(5) Adjust **DY04** to set the vertical amplitude of the image to **175mm**.
(6) Apply the NTSC crosshatch signal to INPUT C.
(7) Adjust **CE08** to optimize the trapezoidal distortion (observe the second vertical lines from the left and right edges as the reference).
(8) Adjust **CE07** to optimize the parallelogram distortion (observe the second vertical lines from the left and right edges as the reference).
(9) Adjust **CE09** to optimize the horizontal arc distortion.
(10) Adjust **DY06** so that the second vertical lines from the left and right edges are linear.
(11) If there is an extreme corner S-shape distortion, adjust **CE06** to optimize it (this adjustment is usually unnecessary).
(12) If there is an extreme corner W-shape distortion, adjust **CE05** to optimize it (this adjustment is usually unnecessary).
(13) Apply the NTSC mono-scope signal to INPUT C.
(14) Ensure that the vertical amplitude of the image is **175mm**. If it is not, adjust **DY04** again.
(15) Adjust **DY05** so that the vertical position of the image comes at the center of the CRT screen.
(16) Vary the adjustment signal and adjustment data, and re-perform adjustments in steps 1 to 15 above (see Table 17).

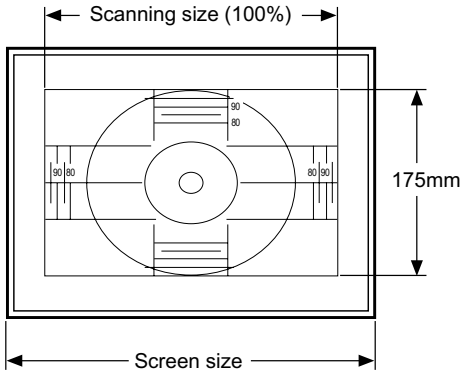

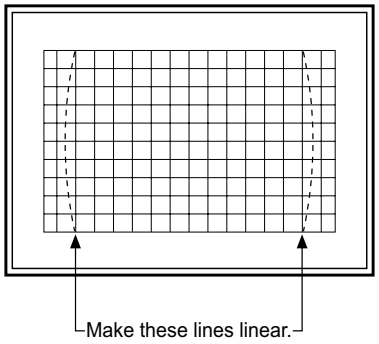

Adjustment Step No.	Adjustment Signal	Adjustment Data							
		Vertical Position	Vertical size	Side Pin Distortion	Corner Distortion (W)	Corner Distortion (S)	Parallelogram Distortion	Trapezoidal Distortion	Horizontal Arc Distortion
1	NTSC	DY05	DY04	DY06	CE05	CE06	CE07	CE08	CE09
2	PAL	DY11	DY10	DY12	CE10	CE11	CE12	CE13	CE14

Table 17

1.10.11 WHITE BALANCE ADJUSTMENTS

LOW-LIGHT WHITE BALANCE (REFERENCE VALUE) ADJUSTMENT	
Measuring Instruments	**Signal generator (Crosshatch signal, 10-step gray scale signal)** **Oscilloscope**
Card (Slot)	**Component/RGB Input Card (Slot 1)**
Test Points	**TP-47R, TP-47G, TP-47B [CRT SOCKET PWB]** **TP-GND [CRT SOCKET PWB]**
Adjustment Points	**SCREEN VR [Bottom potentiometer on high-voltage transformer]** **W*04 (Cut Off (R)), W*05 (Cut Off (G)), W*06 (Cut Off (B)) [Service Menu]**

Notes:

- **Perform the following adjustments after completing the screen size adjustment.**
- **Set the COLOR TEMP./BAL. data in the Setup Menu to "00".**

(1) Apply the 1080/60i component crosshatch signals to INPUT A.
(2) Set "COLOR TEMP." of COLOR TEMP./BAL. in the Setup Menu to HIGH.
(3) Set the PHASE, CHROMA, BRIGHT and CONTRAST potentiometers on the front panel to the center click positions.
(4) Observe the AKB pulse waveforms of TP-47R, TP-47G, TP-47B and ensure that the voltage < A > of the smallest AKB Pulse color is **25V ± 2V**. If it is not, readjust it, using the **SCREEN VR**.
(5) Apply the 1080/60i component 10-step gray scale signal to INPUT A.
(6) Turn the BRIGHT potentiometer on the front panel gradually until the second gray step in the gray scale lights slightly. (Do not touch the SCREEN VR potentiometer.)
(7) Adjust **WW04**, **WW05** and **WW06** in the Service Menu so that the gray bars are not tinted. (Do not set the values of **WW04** to **WW06** no more than "**50**".)
(8) Write the data of **WW04** to **WW06** in **WX04** to **WX06** without any alteration. (Do not adjust the **WX** items.)

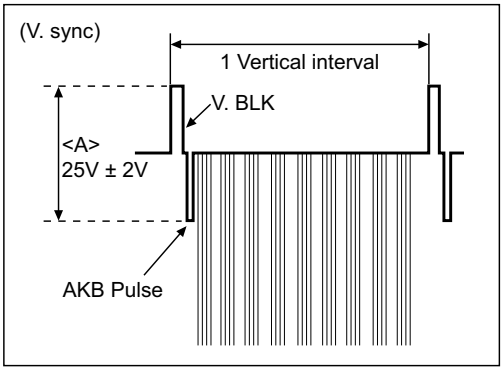

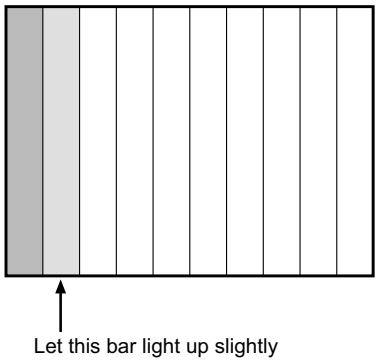

COMPONENT SIGNAL WHITE BALANCE (HIGH: D9300) ADJUSTMENTS	
Measuring Instruments	**Signal generator (10-step gray scale signal)** **Color temperature meter**
Card (Slot)	**Component/RGB Input Card (Slot 1)**
Test Points	
Adjustment Points	**W*01 (Drive (R)), W*03 (Drive (B)), W*04 (Cut Off (R)),** **W*05 (Cut Off (G)), W*06 (Cut Off (B)) [Service Menu]**

Notes:

- **Perform the following adjustments after completing the Low-Light White Balance (Reference Value) Adjustment.**
- **Set the COLOR TEMP./BAL. data in the Setup Menu to "00".**
- **The values adjusted with WW become the reference values for the following adjustment. When this data is changed, it is required to re-adjust the white balance data of all of the adjustment signals (Component, NTSC and PAL). When re-adjusting the 1080/60i signal, use the WI.**

(1) Apply the 1080/60i component 10-step gray scale signal to INPUT A.
(2) Set "COLOR TEMP." of COLOR TEMP./BAL. in the Setup Menu to HIGH.
(3) Set the PHASE, CHROMA, BRIGHT and CONTRAST potentiometers on the front panel to the center click positions.
(4) Adjust **WW01** and **WW03** in the Service Menu using the color temperature meter so that the color temperature is set as shown below.
(Do not touch **WW02**.)

Color temperature : HIGH (D9300). x = 0.283, y = 0.297 (Reference value)

(5) Ensure that the white balance tracking is correct from the gray scale steps with lower color temperatures to those with higher color temperatures. If the white balance tracking is deviated in darker steps, adjust **WW04** to **WW06** to correct it.
(Do not set the values of **WW04** to **WW06** no more than "**50**".)
(6) Vary the adjustment signal and adjustment data, and re-perform adjustments in steps 1 to 5 above (see Table 18).

Adjustment Signal	Function	Adjustment Data		
		R	G	B
COMMON	Drive	WW01	–	WW03
	Cut off	WW04	WW05	WW06
1080/60i	Drive	WI01	–	WI03
	Cut off	WI04	WI05	WI06
1080/50i	Drive	WM01	–	WM03
	Cut off	WM04	WM05	WM06
1080/24psF	Drive	WO01	–	WO03
	Cut off	WO04	WO05	WO06
720/60p	Drive	WQ01	–	WQ03
	Cut off	WQ04	WQ05	WQ06
720/50p	Drive	WS01	–	WS03
	Cut off	WS04	WS05	WS06
480/60i (Common to 576/50i)	Drive	WE01	–	WE03
	Cut off	WE04	WE05	WE06
480/60p (Common to 576/50p)	Drive	WG01	–	WG03
	Cut off	WG04	WG05	WG06

Table 18

COMPONENT SIGNAL WHITE BALANCE (LOW: D65) ADJUSTMENTS	
Measuring Instruments	**Signal generator (10-step gray scale signal)** **Color temperature meter**
Card (Slot)	**Component/RGB Input Card (Slot 1)**
Test Points	
Adjustment Points	**W*01 (Drive (R)), W*03 (Drive (B)), W*04 (Cut Off (R)),** **W*05 (Cut Off (G)), W*06 (Cut Off (B)) [Service Menu]**

Notes:

- **Perform the following adjustments after completing the Low-Light White Balance (Reference Value) Adjustment.**
- **Set the COLOR TEMP./BAL. data in the Setup Menu to "00".**
- **The values adjusted with WX become the reference values for the following adjustment. When this data is changed, it is required to re-adjust the white balance data of all of the adjustment signals (Component, NTSC and PAL). When re-adjusting the 1080/60i signal, use the WJ.**

(1) Apply the 1080/60i component 10-step gray scale signal to INPUT A.
(2) Set "COLOR TEMP." of COLOR TEMP./BAL. in the Setup Menu to LOW.
(3) Set the PHASE, CHROMA, BRIGHT and CONTRAST potentiometers on the front panel to the center click positions.
(4) Adjust **WX01** and **WX03** in the Service Menu using the color temperature meter so that the color temperature is set as shown below.
(Do not touch **WX02**.)

Color temperature: LOW (D65). x = 0.313, y = 0.329 (Reference value)

(5) Ensure that the white balance tracking is correct from the gray scale steps with lower color temperatures to those with higher color temperatures. If the white balance tracking is deviated in darker steps, adjust **WX04** to **WX06** to correct it.
(Do not set the values of **WX04** to **WX06** no more than "**50**".)
(6) Vary the adjustment signal and adjustment data, and re-perform adjustments in steps 1 to 5 above (see Table 19).

Adjustment Signal	Function	Adjustment Data		
		R	G	B
COMMON	Drive	WX01	–	WX03
	Cut off	WX04	WX05	WX06
1080/60i	Drive	WJ01	–	WJ03
	Cut off	WJ04	WJ05	WJ06
1080/50i	Drive	WN01	–	WN03
	Cut off	WN04	WN05	WN06
1080/24psF	Drive	WP01	–	WP03
	Cut off	WP04	WP05	WP06
720/60p	Drive	WR01	–	WR03
	Cut off	WR04	WR05	WR06
720/50p	Drive	WT01	–	WT03
	Cut off	WT04	WT05	WT06
480/60i (Common to 576/50i)	Drive	WF01	–	WF03
	Cut off	WF04	WF05	WF06
480/60p (Common to 576/50p)	Drive	WH01	–	WH03
	Cut off	WH04	WH05	WH06

Table 19

NTSC/PAL SIGNAL WHITE BALANCE (HIGH: D9300, LOW: D65) ADJUSTMENTS	
Measuring Instruments	**Signal generator (10-step gray scale signal)** **Color temperature meter**
Card (Slot)	**NTSC/PAL Video Input Card (Slot 2)**
Test Points	
Adjustment Points	**W*01 (Drive (R)), W*03 (Drive (B)), W*04 (Cut Off (R)),** **W*05 (Cut Off (G)), W*06 (Cut Off (B)) [Service Menu]**

Notes:

- **Perform the following adjustments after completing the 1080/60i White Balance (High: D9300, Low: D65) Adjustments.**
- **Set the COLOR TEMP./BAL. data in the Setup Menu to "00".**
- **The values adjusted with WW (see the description of the Component Signal White Balance (High: D9300) adjustment) become the reference values for the white balance (high: D9300) adjustment. When this data is changed, it is required to re-adjust the white balance (high: D9300) data of all of the adjustment signals (Component, NTSC and PAL).**
- **The values adjusted with WX (see the description of the Component Signal White Balance (Low: D65) adjustment) become the reference values for the white balance (low: D65) adjustment. When this data is changed, it is required to re-adjust the white balance (low: D65) data of all of the adjustment signals (Component, NTSC and PAL).**

<HIGH: D9300>

(1) Apply the NTSC 10-step gray scale signal to INPUT C (Terminal VIDEO1 of the NTSC/PAL Video Input Card).
(2) Set "COLOR TEMP." of COLOR TEMP./BAL. in the Setup Menu to HIGH.
(3) Set the PHASE, CHROMA, BRIGHT and CONTRAST potentiometers on the front panel to the center click positions.
(4) Adjust **WA01** and **WA03** in the Service Menu using the color temperature meter so that the color temperature is set as shown below.
(Do not touch **WA02**.)

Color temperature : HIGH (D9300). x = 0.283, y = 0.297 (Reference value)

(5) Ensure that the white balance tracking is correct from the gray scale steps with lower color temperatures to those with higher color temperatures. If the white balance tracking is deviated in darker steps, adjust **WA04** to **WA06** to correct it.
(Do not set the values of **WA04** to **WA06** no more than "**50**".)

<LOW: D65>

(1) Set "COLOR TEMP." of COLOR TEMP./BAL. in the Setup Menu to LOW.
(2) Adjust **WB01** and **WB03** in the Service Menu using the color temperature meter so that the color temperature is set as shown below.
(Do not touch WB02.)

Color temperature : LOW (D65). x = 0.313, y = 0.329 (Reference value)

(3) Ensure that the white balance tracking is correct from the gray scale steps with lower color temperatures to those with higher color temperatures. If the white balance tracking is deviated in darker steps, adjust **WB04** to **WB06** to correct it.
(Do not set the values of **WB04** to **WB06** no more than "**50**".)
(4) Vary the adjustment signal and adjustment data, and re-perform adjustments in steps 1 to 8 above (see Table 20).

Adjustment Signal	Function	Adjustment Data		
		R	G	B
NTSC (Common to VIDEO and Y/C) [HIGH : D9300]	Drive	WA01	–	WA03
	Cut off	WA04	WA05	WA06
NTSC (Common to VIDEO and Y/C) [LOW : D65]	Drive	WB01	–	WB03
	Cut off	WB04	WB05	WB06
PAL (Common to VIDEO and Y/C) [HIGH : D9300]	Drive	WC01	–	WC03
	Cut off	WC04	WC05	WC06
PAL (Common to VIDEO and Y/C) [LOW : D65]	Drive	WD01	–	WD03
	Cut off	WD04	WD05	WD06

Table 20

1.10.12 BRIGHTNESS ADJUSTMENTS

BRIGHTNESS ADJUSTMENTS (HDTV)	
Measuring Instruments	**Signal generator (Gray scale signal)**
Card (Slot)	**Component/RGB Input Card (Slot 1)**
Test Points	
Adjustment Points	**S*02 (Overscan Bright High), S*06 (Overscan Bright Low), SP** (Underscan Bright High/Low) [Service Menu]**

Notes:

- **Perform the following adjustments after completing the Contrast and White Balance adjustments.**
- **Set the PICTURE SUB ADJ. data in the Setup Menu to "00".**
- **The value adjusted at the SR adjustment becomes the reference value for the following adjustments. When this data is changed, it is required to re-adjust the data of all of the adjustment signals (HDTV, SDTV and NTSC/PAL). When re-adjusting the 1080/60i signal, use the SI.**
- **When overscan data of a signal is changed, it is required to re-adjust the underscan data of the same adjustment signal.**
- **After completing the brightness adjustments, make sure that the Low-Light is not deviated. If it is, it is required to perform the Low-Light adjustment again.**

– Standard value (SO) adjustment –

<White Balance HIGH: D9300>

(1) Apply the 1080/60i component gray scale signal to INPUT A.
(2) Set "COLOR TEMP." of COLOR TEMP./BAL. in the Setup Menu to HIGH.
(3) Set the PHASE, CHROMA, BRIGHT and CONTRAST potentiometers on the front panel to the center click positions.
(4) Adjust **SR02** in the Service Menu so that the 0% black area in the gray scale signal lights up slightly. (Be sure to avoid degradation of the black color.)

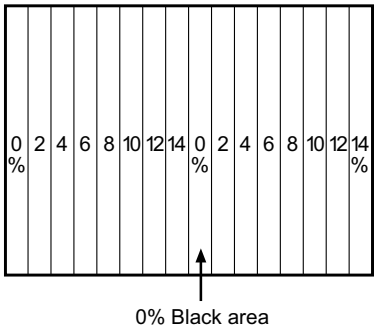

<White Balance LOW: D65>

(1) Set "COLOR TEMP." of COLOR TEMP./BAL. in the Setup Menu to LOW.
(2) Adjust **SR06** so that the 0% black area in the gray scale signal lights slightly. (Be sure to avoid degradation of the black color.)

– Other signals adjustments –

<White Balance HIGH: D9300>

(1) Apply the 1080/60i component gray scale signal to INPUT A.
(2) Set "COLOR TEMP." of COLOR TEMP./BAL. in the Setup Menu to HIGH.
(3) Set the PHASE, CHROMA, BRIGHT and CONTRAST potentiometers on the front panel to the center click positions.
(4) Adjust **SI02** in the Service Menu so that the 0% black area in the gray scale signal lights up slightly. (Be sure to avoid degradation of the black color.)
(5) Set the UNDER SCAN button on the front panel to ON so that the scanning size is underscanning.
(6) Adjust **SP26** so that the 0% black area in the gray scale signal lights slightly. (Be sure to avoid degradation of the black color.)
(7) Set the UNDER SCAN button on the front panel to OFF.

<White Balance LOW: D65>

(1) Set "COLOR TEMP." of COLOR TEMP./BAL. in the Setup Menu to LOW.
(2) Adjust **SI06** so that the 0% black area in the gray scale signal lights slightly. (Be sure to avoid degradation of the black color.)
(3) Set the UNDER SCAN button on the front panel to ON so that the scanning size is underscanning.
(4) Adjust **SP27** so that the 0% black area in the gray scale signal lights slightly. (Be sure to avoid degradation of the black color.)
(5) Set the UNDER SCAN button on the front panel to OFF.
(6) Vary the adjustment signal and adjustment data, and re-perform adjustments in steps 7 to 18 above (see Table 21).

Adjustment Signal	White Balance HIGH		White Balance LOW	
	Overscan	Underscan	Overscan	Underscan
COMMON	SR02	–	SR06	–
1080/60i	SI02	SP26	SI06	SP27
1080/50i	SK02	SP32	SK06	SP33
1080/24psF	SL02	SP35	SL06	SP36
720/60p	SM02	SP38	SM06	SP39
720/50p	SN02	SP41	SN06	SP42

Table 21

BRIGHTNESS ADJUSTMENTS (SDTV)	
Measuring Instruments	**Signal generator (Gray scale signal)**
Card (Slot)	**Component/RGB Input Card (Slot 1)**
Test Points	
Adjustment Points	**S*02 (4:3 Overscan Bright High), S*06 (4:3 Overscan Bright Low), SP** (4:3 Underscan Bright High/Low), SQ** (16:9 Overscan/Underscan Bright High/Low) [Service Menu]**

Notes:

- **Perform the following adjustment after completing the 1080/60i Brightness Adjustment.**
- **Set the PICTURE SUB ADJ. data in the Setup Menu to "00".**
- **The SR value (see the description for the HDTV Brightness adjustment) becomes the reference value for the following adjustments. When this data is changed, it is required to re-adjust the data of all of the adjustment signals (HDTV, SDTV and NTSC/PAL). When re-adjusting the 1080/60i signal, use the SI.**
- **When overscan data of a signal is changed, it is required to re-adjust the underscan data of the same adjustment signal.**
- **When the 4:3 data of a signal is changed, it is required to re-adjust the 16:9 data of the same adjustment signal.**
- **After completing the brightness adjustments, make sure that the Low-Light is not deviated. If it is, it is required to perform the Low-Light adjustment again.**

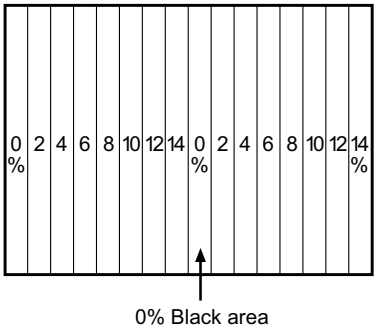

<White Balance HIGH: D9300>

(1) Apply the 480/60i component gray scale signal to INPUT A.
(2) Set "COLOR TEMP." of COLOR TEMP./BAL. in the Setup Menu to HIGH.
(3) Set the PHASE, CHROMA, BRIGHT and CONTRAST potentiometers on the front panel to the center click positions.
(4) Adjust **SE02** in the Service Menu so that the 0% black area in the gray scale signal lights up slightly. (Be sure to avoid degradation of the black color.)
(5) Set the ASPECT button on the front panel to ON so that the scanning size is 16:9.
(6) Adjust **SQ26** so that the 0% black area in the gray scale signal lights slightly. (Be sure to avoid degradation of the black color.)
(7) Set the ASPECT button on the front panel to OFF and the UNDER SCAN button to ON to set the scanning size to underscanning for the 4:3 ratio.
(8) Adjust **SP14** so that the 0% black area in the gray scale signal lights up slightly. (Be sure to avoid degradation of the black color.)
(9) Set the ASPECT button on the front panel to ON to set the scanning size to underscanning for the 16:9 ratio.
(10) Adjust **SQ29** so that the 0% black area in the gray scale signal lights slightly. (Be sure to avoid degradation of the black color.)
(11) Set the ASPECT and UNDER SCAN buttons on the front panel to OFF.

<White Balance LOW: D65>

(1) Set "COLOR TEMP." of COLOR TEMP./BAL. in the Setup Menu to LOW.
(2) Adjust **SE06** so that the 0% black area in the gray scale signal lights slightly. (Be sure to avoid degradation of the black color.)
(3) Set the ASPECT button on the front panel to ON so that the scanning size is 16:9.
(4) Adjust **SQ27** so that the 0% black area in the gray scale signal lights slightly. (Be sure to avoid degradation of the black color.)
(5) Set the ASPECT button on the front panel to OFF and the UNDER SCAN button to ON to set the scanning size to underscanning for the 4:3 ratio.
(6) Adjust **SP15** so that the 0% black area in the gray scale signal lights slightly. (Be sure to avoid degradation of the black color.)
(7) Set the ASPECT button on the front panel to ON to set the scanning size to underscanning for the 16:9 ratio.
(8) Adjust **SQ30** so that the 0% black area in the gray scale signal lights slightly. (Be sure to avoid degradation of the black color.)
(9) Set the ASPECT and UNDER SCAN buttons on the front panel to OFF.
(10) Vary the adjustment signal and adjustment data, and re-perform adjustments in steps 1 to 20 above (see Table 22).

Adjustment Signal	White Balance HIGH				White Balance LOW			
	Overscan		Underscan		Overscan		Underscan	
	4 : 3	16 : 9	4 : 3	16 : 9	4 : 3	16 : 9	4 : 3	16 : 9
480/60i	SE02	SQ26	SP14	SQ29	SE06	SQ27	SP15	SQ30
576/50i	SF02	SQ32	SP17	SQ35	SF06	SQ33	SP18	SQ36
480/60p	SG02	SQ38	SP20	SQ41	SG06	SQ39	SP21	SQ42
576/50p	SH02	SQ44	SP23	SQ47	SH06	SQ45	SP24	SQ48

Table 22

BRIGHTNESS ADJUSTMENTS (NTSC/PAL VIDEO)	
Measuring Instruments	**Signal generator (Gray scale signal)**
Card (Slot)	**NTSC/PAL Video Input Card (Slot 2)**
Test Points	
Adjustment Points	**S*02 (4:3 Overscan Bright High), S*06 (4:3 Overscan Bright Low), SP** (4:3 Underscan Bright High/Low), SQ** (16:9 Overscan/Underscan Bright High/Low) [Service Menu]**

Notes:

- **Ensure that the output waveforms from the NTSC/PAL Video Input Cards are normal before proceeding to the following adjustments.**
- **Perform the following adjustments after completing the 1080/60i Brightness Adjustment.**
- **Set the PICTURE SUB ADJ. data in the Setup Menu to "00".**
- **The SR value (see the description for the HDTV Brightness adjustment) becomes the reference value for the following adjustments. When this data is changed, it is required to re-adjust the data of all of the adjustment signals (HDTV, SDTV and NTSC/PAL).**
  When re-adjusting the 1080/60i signal, use the SI. (For the adjustment of the 1080/60i signal, use the Component/RGB Input Card.)
- **When overscan data of a signal is changed, it is required to re-adjust the underscan data of the same adjustment signal.**
- **When the 4:3 data of a signal is changed, it is required to re-adjust the 16:9 data of the same adjustment signal.**
- **After completing the brightness adjustments, make sure that the Low-Light is not deviated. If it is, it is required to perform the Low-Light adjustment again.**

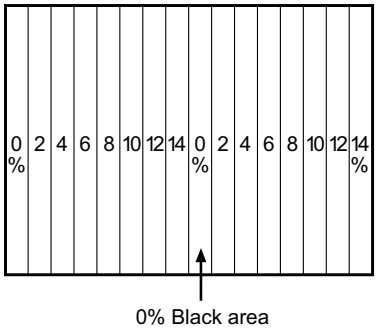

<White Balance HIGH: D9300>

(1) Apply the NTSC gray scale signal to INPUT C (Terminal VIDEO1 of the NTSC/PAL Video Input Card).
(2) Set "COLOR TEMP." of COLOR TEMP./BAL. in the Setup Menu to HIGH.
(3) Set the PHASE, CHROMA, BRIGHT and CONTRAST potentiometers on the front panel to the center click positions.
(4) Adjust **SA02** in the Service Menu so that the 0% black area in the gray scale signal lights up slightly. (Be sure to avoid degradation of the black color.)
(5) Set the ASPECT button on the front panel to ON so that the scanning size is 16:9.
(6) Adjust **SQ02** so that the 0% black area in the gray scale signal lights slightly. (Be sure to avoid degradation of the black color.)
(7) Set the ASPECT button on the front panel to OFF and the UNDER SCAN button to ON to set the scanning size to underscanning for the 4:3 ratio.
(8) Adjust **SP02** so that the 0% black area in the gray scale signal lights up slightly. (Be sure to avoid degradation of the black color.)
(9) Set the ASPECT button on the front panel to ON to set the scanning size to underscanning for the 16:9 ratio.
(10) Adjust **SQ05** so that the 0% black area in the gray scale signal lights slightly. (Be sure to avoid degradation of the black color.)
(11) Set the ASPECT and UNDER SCAN buttons on the front panel to OFF.

<White Balance LOW: D65>

(1) Set "COLOR TEMP." of COLOR TEMP./BAL. in the Setup Menu to LOW.
(2) Adjust **SA06** so that the 0% black area in the gray scale signal lights slightly. (Be sure to avoid degradation of the black color.)
(3) Set the ASPECT button on the front panel to ON so that the scanning size is 16:9.
(4) Adjust **SQ03** so that the 0% black area in the gray scale signal lights slightly. (Be sure to avoid degradation of the black color.)
(5) Set the ASPECT button on the front panel to OFF and the UNDER SCAN button to ON to set the scanning size to underscanning for the 4:3 ratio.
(6) Adjust **SP03** so that the 0% black area in the gray scale signal lights slightly. (Be sure to avoid degradation of the black color.)
(7) Set the ASPECT button on the front panel to ON to set the scanning size to underscanning for the 16:9 ratio.
(8) Adjust **SQ06** so that the 0% black area in the gray scale signal lights slightly. (Be sure to avoid degradation of the black color.)
(9) Set the ASPECT and UNDER SCAN buttons on the front panel to OFF.
(10) Vary the adjustment signal and adjustment data, and re-perform adjustments in steps 1 to 20 above (see Table 23).

Adjustment Signal	White Balance HIGH				White Balance LOW			
	Overscan		Underscan		Overscan		Underscan	
	4 : 3	16 : 9	4 : 3	16 : 9	4 : 3	16 : 9	4 : 3	16 : 9
NTSC(VIDEO)	SA02	SQ02	SP02	SQ05	SA06	SQ03	SP03	SQ06
PAL(VIDEO)	SC02	SQ14	SP08	SQ17	SC06	SQ15	SP09	SQ18

Table 23

BRIGHTNESS ADJUSTMENTS (NTSC/PAL Y/C)	
Measuring Instruments	**Signal generator (Gray scale signal)**
Card (Slot)	**NTSC/PAL Video Input Card (Slot 2)**
Test Points	
Adjustment Points	**S*02 (4:3 Overscan Bright High), S*06 (4:3 Overscan Bright Low), SP** (4:3 Underscan Bright High/Low), SQ** (16:9 Overscan/Underscan Bright High/Low) [Service Menu]**

Notes:

- **Ensure that the output waveforms from the NTSC/PAL Video Input Cards are normal before proceeding to the following adjustments.**
- **Perform the following adjustments after completing the 1080/60i Brightness Adjustment.**
- **Set the PICTURE SUB ADJ. data in the Setup Menu to "00".**
- **The SR value (see the description for the HDTV Brightness adjustment) becomes the reference value for the following adjustments. When this data is changed, it is required to re-adjust the data of all of the adjustment signals (HDTV, SDTV and NTSC/PAL).**
  When re-adjusting the 1080/60i signal, use the SI. (For the adjustment of the 1080/60i signal, use the Component/RGB Input Card.)
- **When overscan data of a signal is changed, it is required to re-adjust the underscan data of the same adjustment signal.**
- **When the 4:3 data of a signal is changed, it is required to re-adjust the 16:9 data of the same adjustment signal.**
- **After completing the brightness adjustments, make sure that the Low-Light is not deviated. If it is, it is required to perform the Low-Light adjustment again.**

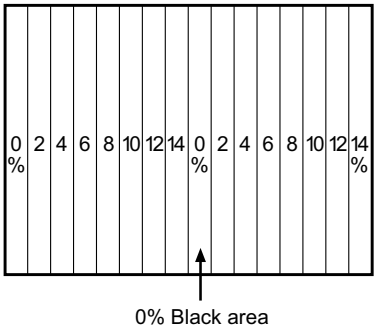

<White Balance HIGH: D9300>

(1) Apply the NTSC gray scale signal to INPUT D (Terminal Y/C of the NTSC/PAL Video Input Card).
(2) Set "COLOR TEMP." of COLOR TEMP./BAL. in the Setup Menu to HIGH.
(3) Set the PHASE, CHROMA, BRIGHT and CONTRAST potentiometers on the front panel to the center click positions.
(4) Adjust **SB02** in the Service Menu so that the 0% black area in the gray scale signal lights up slightly. (Be sure to avoid degradation of the black color.)
(5) Set the ASPECT button on the front panel to ON so that the scanning size is 16:9.
(6) Adjust **SQ08** so that the 0% black area in the gray scale signal lights slightly. (Be sure to avoid degradation of the black color.)
(7) Set the ASPECT button on the front panel to OFF and the UNDER SCAN button to ON to set the scanning size to underscanning for the 4:3 ratio.
(8) Adjust **SP05** so that the 0% black area in the gray scale signal lights up slightly. (Be sure to avoid degradation of the black color.)
(9) Set the ASPECT button on the front panel to ON to set the scanning size to underscanning for the 16:9 ratio.
(10) Adjust **SQ11** so that the 0% black area in the gray scale signal lights slightly. (Be sure to avoid degradation of the black color.)
(11) Set the ASPECT and UNDER SCAN buttons on the front panel to OFF.

<White Balance LOW: D65>

(1) Set "COLOR TEMP." of COLOR TEMP./BAL. in the Setup Menu to LOW.
(2) Adjust **SB06** so that the 0% black area in the gray scale signal lights slightly. (Be sure to avoid degradation of the black color.)
(3) Set the ASPECT button on the front panel to ON so that the scanning size is 16:9.
(4) Adjust **SQ09** so that the 0% black area in the gray scale signal lights slightly. (Be sure to avoid degradation of the black color.)
(5) Set the ASPECT button on the front panel to OFF and the UNDER SCAN button to ON to set the scanning size to underscanning for the 4:3 ratio.
(6) Adjust **SP06** so that the 0% black area in the gray scale signal lights slightly. (Be sure to avoid degradation of the black color.)
(7) Set the ASPECT button on the front panel to ON to set the scanning size to underscanning for the 16:9 ratio.
(8) Adjust **SQ12** so that the 0% black area in the gray scale signal lights slightly. (Be sure to avoid degradation of the black color.)
(9) Set the ASPECT and UNDER SCAN buttons on the front panel to OFF.
(10) Vary the adjustment signal and adjustment data, and re-perform adjustments in steps 1 to 20 above (see Table 24).

Adjustment Signal	White Balance HIGH				White Balance LOW			
	Overscan		Underscan		Overscan		Underscan	
	4 : 3	16 : 9	4 : 3	16 : 9	4 : 3	16 : 9	4 : 3	16 : 9
NTSC(Y/C)	SB02	SQ08	SP05	SQ11	SB06	SQ09	SP06	SQ12
PAL(Y/C)	SD02	SQ20	SP11	SQ23	SD06	SQ21	SP12	SQ24

Table 24

TROUBLESHOOTING

2.1 SELF DIAGNOSIS

The unit incorporates a self-diagnosis function and is capable of indicating the absence of raster by blinking on the front panel LEDs and the on-screen display.

2.1.1 DISPLAYING THE SELF DIAGNOSIS INDICATIONS

(1) LED indication: When raster is absent, the six LEDs of INPUT SELECT A to F on the front panel blink to indicate this condition.
(2) On-screen display: The self diagnosis results can be displayed when the unit is on.

2.1.2 LED INDICATION

(1) Operation during an LED indication:
The main microcomputer detects any abnormalities in communication on the I^2C and causes the LEDs to blink.
At the same time, the unit is turned off to protect it but the LEDs keep on blinking.
At this time, the main microcomputer does not accept commands except for the POWER switch on the front panel.

(2) How to cancel the LED blinking:
Press the POWER switch on the front panel to turn the unit ON again.

(3) Types of LED indications

LED INDICATION TYPE	ON-SCREEN DISPLAY	DIAGNOSIS RESULT	MALFUNCTIONING CIRCUIT
INPUT A blinking at 0.5-second intervals	I^2C-0 DEFLECTION BUS	Communication error in the signal buses (SCL0, SDA0) of I^2C	• SIGNAL PWB ASS'Y IC801 • MAIN PWB ASS'Y IC510 • MOTHER PWB ASS'Y IC103 • REMOTE PWB ASS'Y IC102, IC103
INPUT B blinking at 0.5-second intervals	I^2C-1 SIGNAL BUS	Communication error in the signal buses (SCL1, SDA1) of I^2C	• SIGNAL PWB ASS'Y IC104, IC601, IC801 • FRONT CONTROL PWB ASS'Y IC101
INPUT C blinking at 0.5-second intervals	I^2C ROM BUS	Communication error in the ROM buses (SCL2, SDA2) of I^2C	• SIGNAL PWB ASS'Y IC801, IC805 • SUB DEF MODULE PWB ASS'Y IC001
INPUT D blinking at 0.5-second intervals	X-RAY	X-rays detected	• SIGNAL PWB ASS'Y IC801 • HV CONTROL MODULE PWB ASS'Y IC503
INPUT E blinking at 0.5-second intervals	OCP	Overcurrent detected	• SIGNAL PWB ASS'Y IC801 • MAIN PWB ASS'Y
INPUT F blinking at 0.5-second intervals	VOFF	Neck-break prevention detected	• SIGNAL PWB ASS'Y IC801 • SUB DEF MODULE PWB ASS'Y IC005

2.1.3 ON-SCREEN DISPLAY (SELF DIAGNOSIS DISPLAY MODE)

(1) How to enter the self diagnosis display mode:

Press a key on the front panel to display the service menu and select "**DIAGNOSIS**".
(See "Basic Operations of Service Menu" on page ELE-5.)

(2) How to clear the trouble history in the self diagnosis mode:

In the DIAGNOSIS MENU as shown on the high, select "**CLEAR**".
A new screen appears. Press the VOL + (▶) on the front panel to select "**YES**".
This clears the trouble history in the self diagnosis mode and the symbols displayed to the right of all of the items become " ○ ".

(3) Trouble history

The trouble history of each item is counted up to 9. The figure is held in the memory until the trouble history is cleared.
As a result, the displayed trouble history count remains 9 even if it actually exceeds 9.

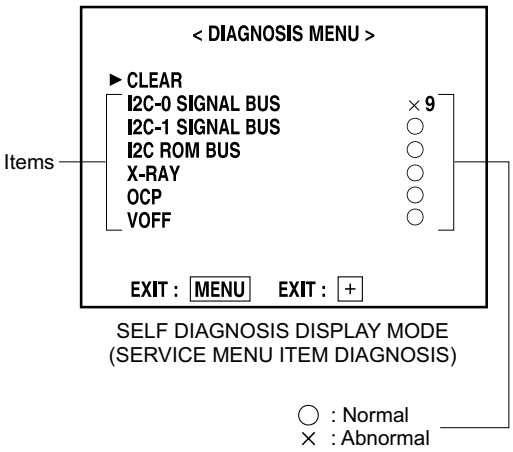

SELF DIAGNOSIS DISPLAY MODE
(SERVICE MENU ITEM DIAGNOSIS)

SECTION 3

BLOCK DIAGRAM

CONTENTS

BLOCK DIAGRAM BLK-1

BLOCK DIAGRAM

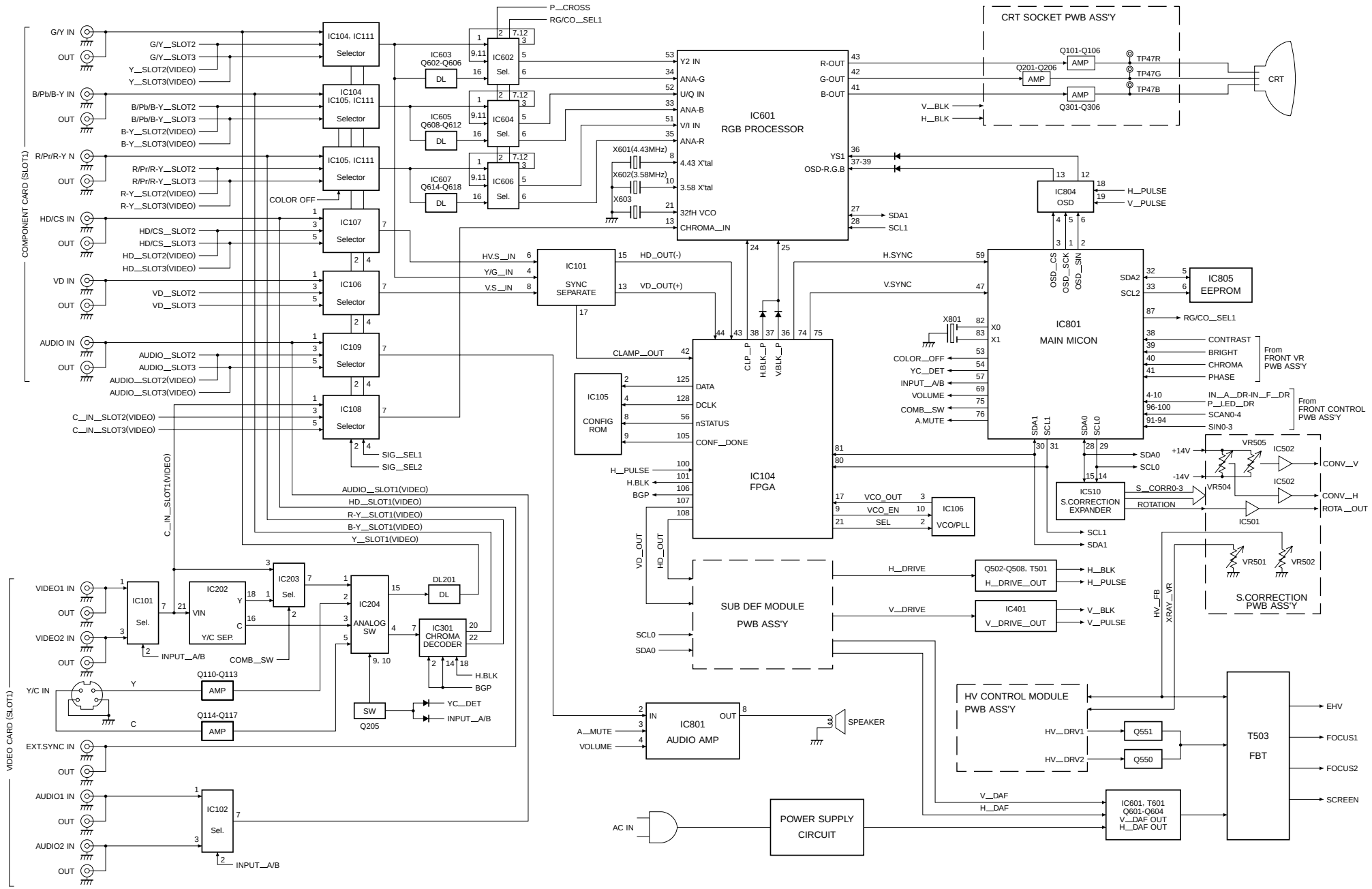

SECTION 4

SCHEMATIC DIAGRAMS

NOTE:
BE SURE TO MAKE YOUR ORDERS OF REPLACEMENT PARTS ACCORDING TO PARTS LIST, SECTION 6

CAUTION

THE ⊡ MARK INDICATES THE PRIMARY CIRCUIT TO DISTINGUISH THE PRIMARY FROM THE SECONDARY CIRCUIT.
PAY ATTENTION NOT TO RECEIVE AN ELECTRIC SHOCK DURING REPAIR AND SERVICE OF THE PRODUCTS.

IMPORTANT SAFETY NOTICE:
COMPONENTS IDENTIFIED WITH THE MARK ⚠ HAVE THE SPECIAL CHARACTERISTICS FOR SAFETY.
WHEN REPLACING ANY OF THESE COMPONENTS, USE ONLY THE SAME TYPE.

CONTENTS

SIGNAL PWB (1/2) AND LED PWB CIRCUIT DIAGRAMS.....SCM-1
SIGNAL PWB CIRCUIT DIAGRAM (2/2).....SCM-2
MAIN PWB CIRCUIT DIAGRAM (1/2).....SCM-3
MAIN PWB CIRCUIT DIAGRAM (2/2).....SCM-4
S. CORRECTION PWB CIRCUIT DIAGRAM.....SCM-5
CRT SOCKET PWB CIRCUIT DIAGRAM.....SCM-6
FRONT CONTROL PWB AND FRONT VR PWB CIRCUIT DIAGRAMS.....SCM-7
MOTHER PWB CIRCUIT DIAGRAM.....SCM-8
REMOTE PWB CIRCUIT DIAGRAM.....SCM-9
SUB DEF MODULE PWB CIRCUIT DIAGRAM.....SCM-10
HV CONTROL MODULE PWB CIRCUIT DIAGRAM.....SCM-11

NOTE ON USING CIRCUIT DIAGRAMS

1. SAFETY

The components identified by the ⚠ symbol and shading are critical for safety. For continued safety replace safety critical components only with manufactures recommended parts.

2. SPECIFIED VOLTAGE AND WAVEFORM VALUES

The voltage and waveform values have been measured under the following conditions.

(1) Input signal	: Colour bar signal (1080/60i)
(2) Setting positions of each knob/button and variable resistor	: Original setting position when shipped
(3) Internal resistance of tester	: DC 20kΩ/V
(4) Oscilloscope sweeping time	: H ⇒ 20μs/div
	: V ⇒ 5ms/div
	: Others ⇒ Sweeping time is specified
(5) Voltage values	: All DC voltage values

NOTE:

Since the voltage values of signal circuit vary to some extent according to adjustments, use them as reference values.

3. INDICATION OF PARTS SYMBOL [EXAMPLE]

- In the PW board : R1209 → R209

4. INDICATIONS ON THE CIRCUIT DIAGRAM

(1) Resistors

- Resistance value

No unit	: [Ω]
k	: [kΩ]
M	: [MΩ]

- Rated allowable power

No indication	: 1/10 [W]
Others	: As specified

- Type

No indication	: Carbon resistor
OMR	: Oxide metal film resistor
MFR	: Metal film resistor
MPR	: Metal plate resistor
UNFR	: Uninflammable resistor
FR	: Fusible resistor

NOTE:

Composition resistor 1/2 [W] is specified as 1/2S or Comp.

(2) Capacitors

- Capacitance value

1 or higher	: [pF]
less than 1	: [μF]

- Withstand voltage

No indication	: DC50[V]
AC indicated	: AC withstand voltage [V]
Others	: DC withstand voltage [V]

NOTE:

Electrolytic Capacitors

47/50[Example] : Capacitance value [μF]/withstand voltage[V]

- Type

No indication	: Ceramic capacitor
MY	: Mylar capacitor
MM	: Metalized mylar capacitor
PP	: Polypropylene capacitor
MPP	: Metalized polypropylene capacitor
MF	: Metalized film capacitor
TF	: Thin film capacitor
BP	: Bipolar electrolytic capacitor
TAN	: Tantalum capacitor

(3) Coils

No unit	: [μH]
Others	: As specified

(4) Power Supply

: B1

: B2(12V)

: 9V

: 5V

NOTE:

Respective voltage values are indicated

(5) Test point

: Test point

: Only test point display

(6) Connecting method

: Connector

: Wrapping or soldering

: Receptacle

(7) Ground symbol

⊥ : LIVE side ground

⏚ : ISOLATED(NEUTRAL) side ground

⏚ : EARTH ground

⏚ : DIGITAL ground

5. NOTE FOR REPAIRING SERVICE

This model's power circuit is partly different in the GND. The difference of the GND is shown by the LIVE : (⊥) side GND and the ISOLATED(NEUTRAL) : (⏚) side GND. Therefore, care must be taken for the following points.

(1) Do not touch the LIVE side GND or the LIVE side GND and the ISOLATED(NEUTRAL) side GND simultaneously. If the above caution is not respected, an electric shock may be caused. Therefore, make sure that the power cord is surely removed from the receptacle when, for example, the chassis is pulled out.

(2) Do not short between the LIVE side GND and ISOLATED(NEUTRAL) side GND or never measure the LIVE side GND and ISOLATED (NEUTRAL) side GND at the same time with a measuring apparatus (oscilloscope, etc.). If the above precaution is not respected, a fuse or any parts will be broken.

NOTE:

- **Since the circuit diagram is a standard one, the circuit and circuit constants may be subject to change for improvement without any notice.**
- **Due improvement in performance, some part numbers show in the circuit diagram may not agree with those indicated in the part list.**
  When ordering parts, please use the numbers that appear in the Parts List.

SEMICONDUCTOR SHAPES

TRANSISTOR

BOTTOM VIEW	FRONT VIEW				TOP VIEW
		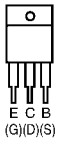	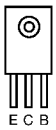	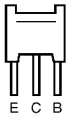	CHIP TR 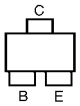

IC

BOTTOM VIEW	FRONT VIEW			TOP VIEW
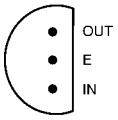	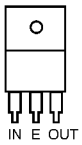	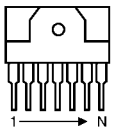	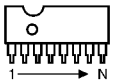	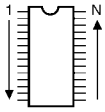

CHIP IC

TOP VIEW		
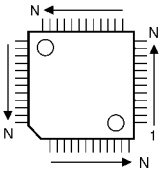	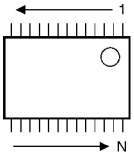	

CIRCUIT DIAGRAMS

SIGNAL PWB (1/2) AND LED PWB CIRCUIT DIAGRAMS

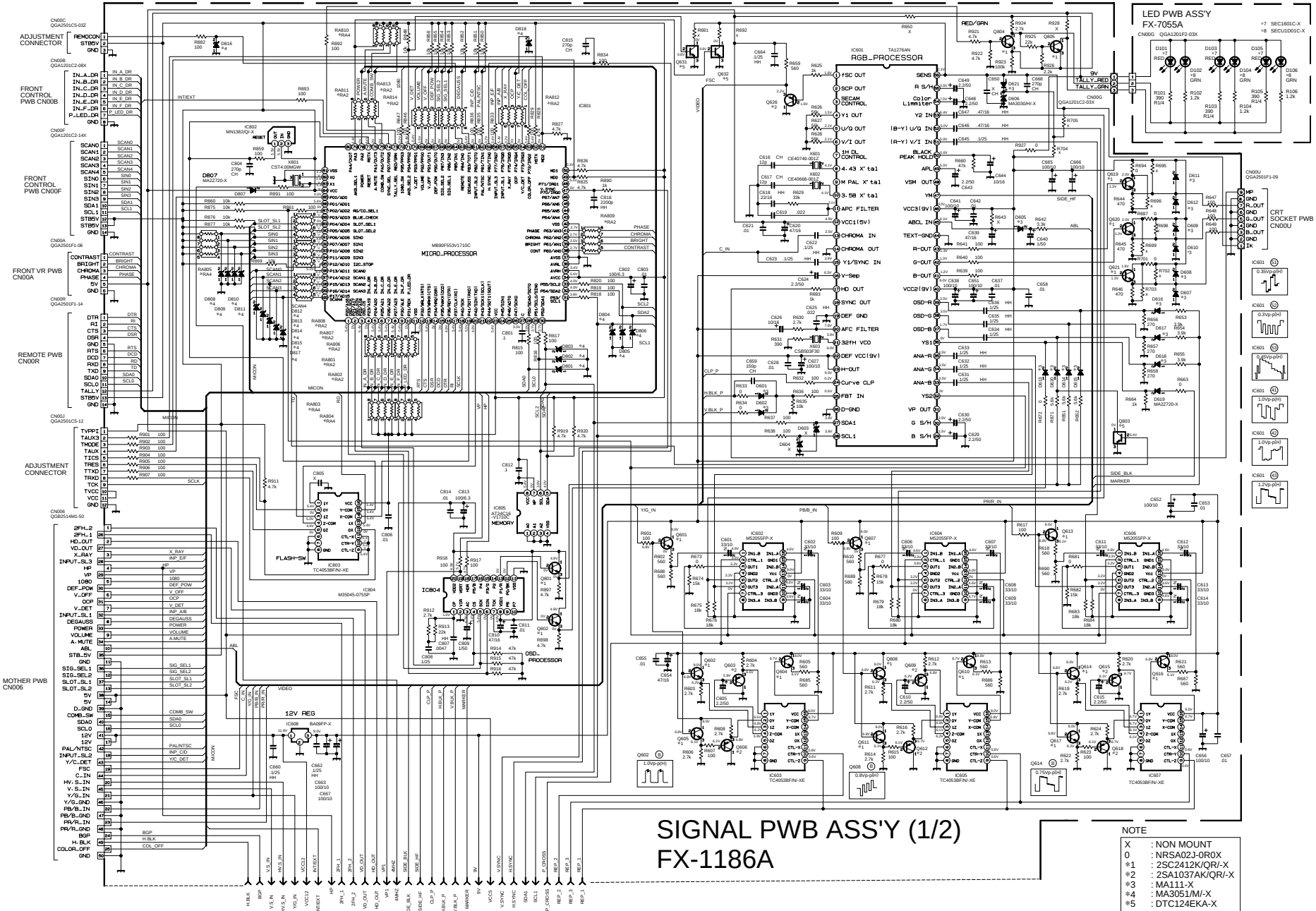

SIGNAL PWB ASS'Y (1/2)
FX-1186A

NOTE

X	: NON MOUNT
0	: NRSA02J-0R0X
*1	: 2SC2412K/QR/-X
*2	: 2SA1037AK/QR/-X
*3	: MA111-X
*4	: MA3051/M/-X
*5	: DTC124EKA-X
*RA2	: NRZ0040-101X
*RA4	: NRZ0040-103X

SIGNAL PWB ASS'Y (2/2)
FX-1186A

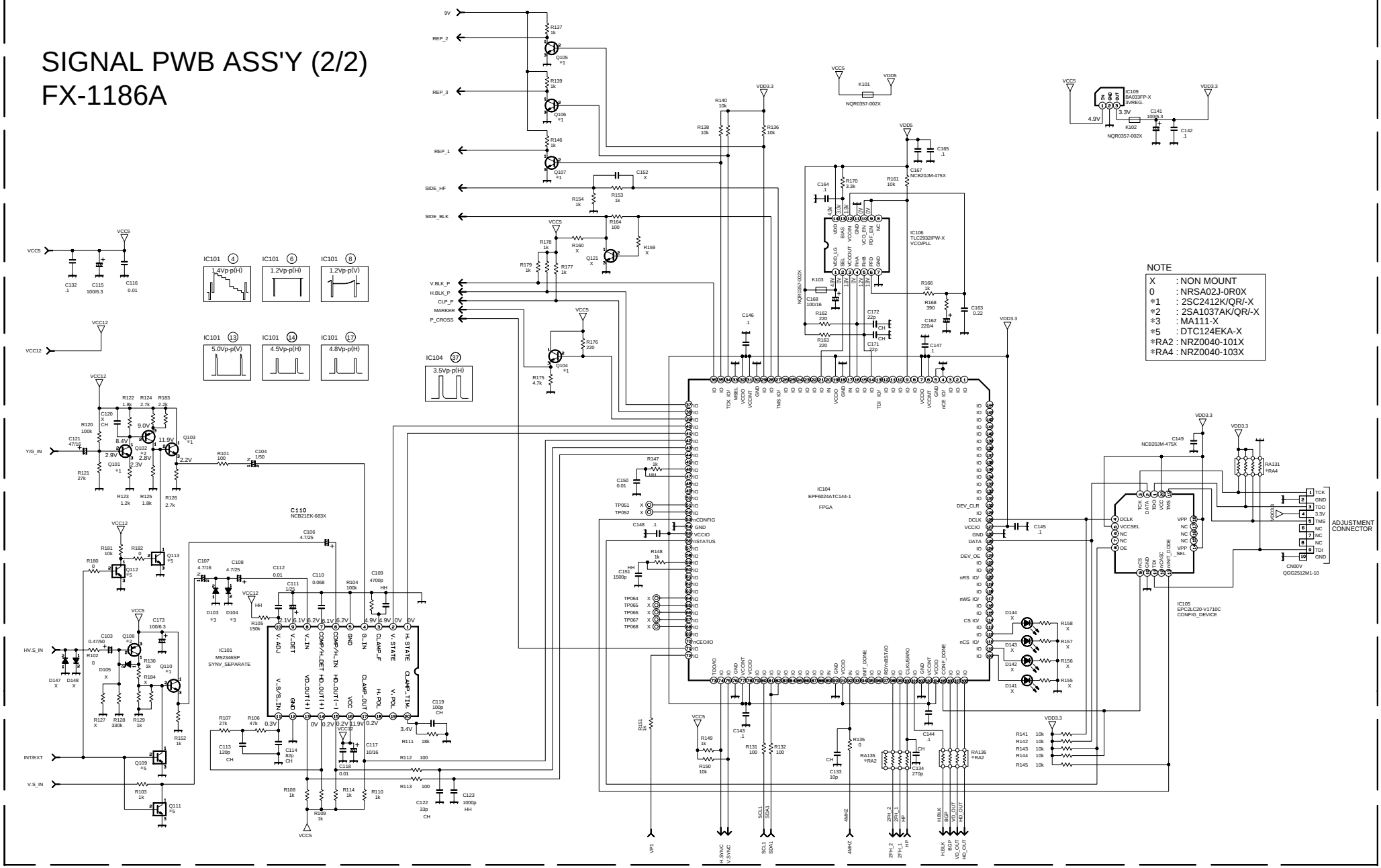

MAIN PWB CIRCUIT DIAGRAM (1/2)

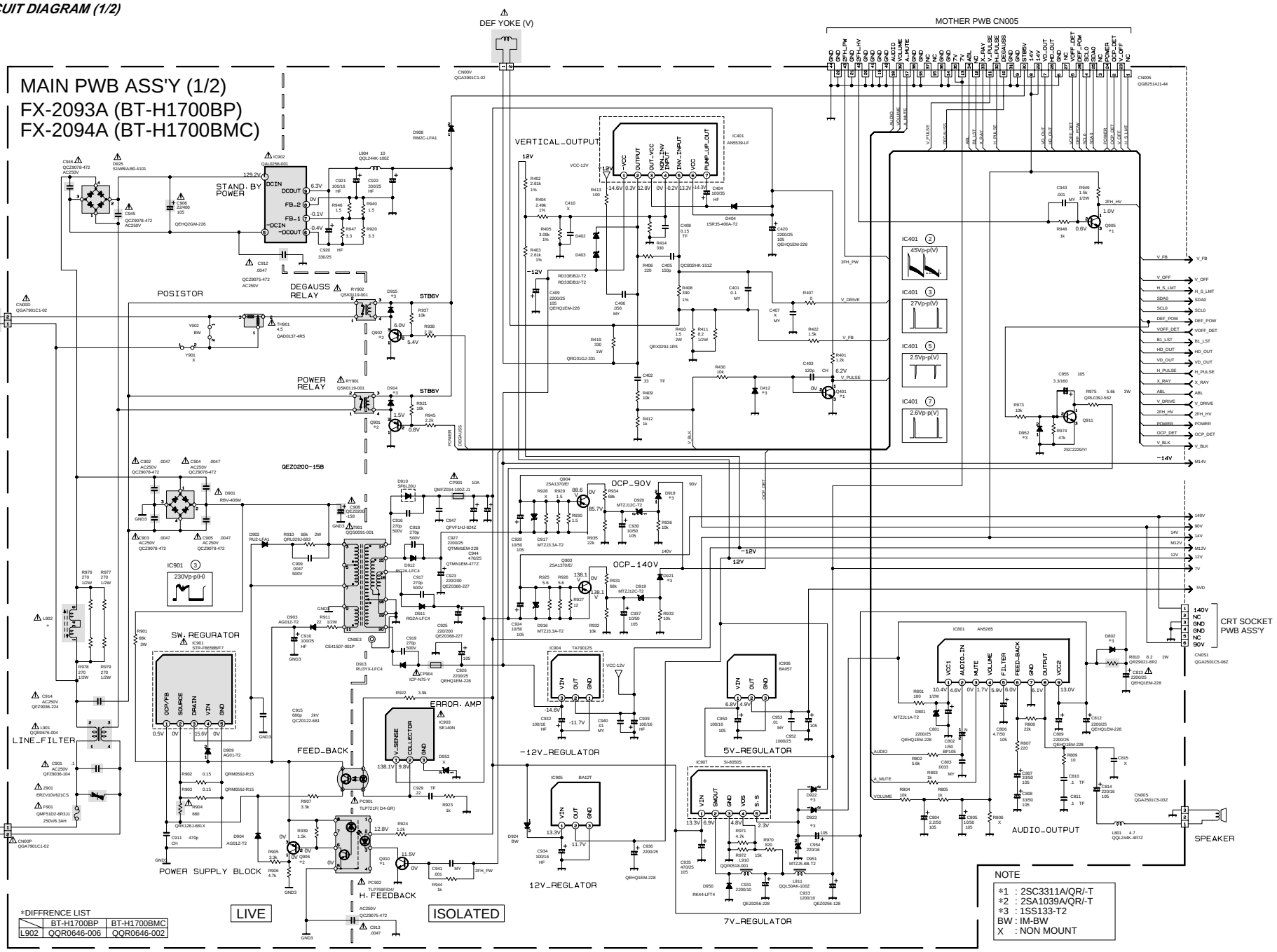

MAIN PWB CIRCUIT DIAGRAM (2/2)

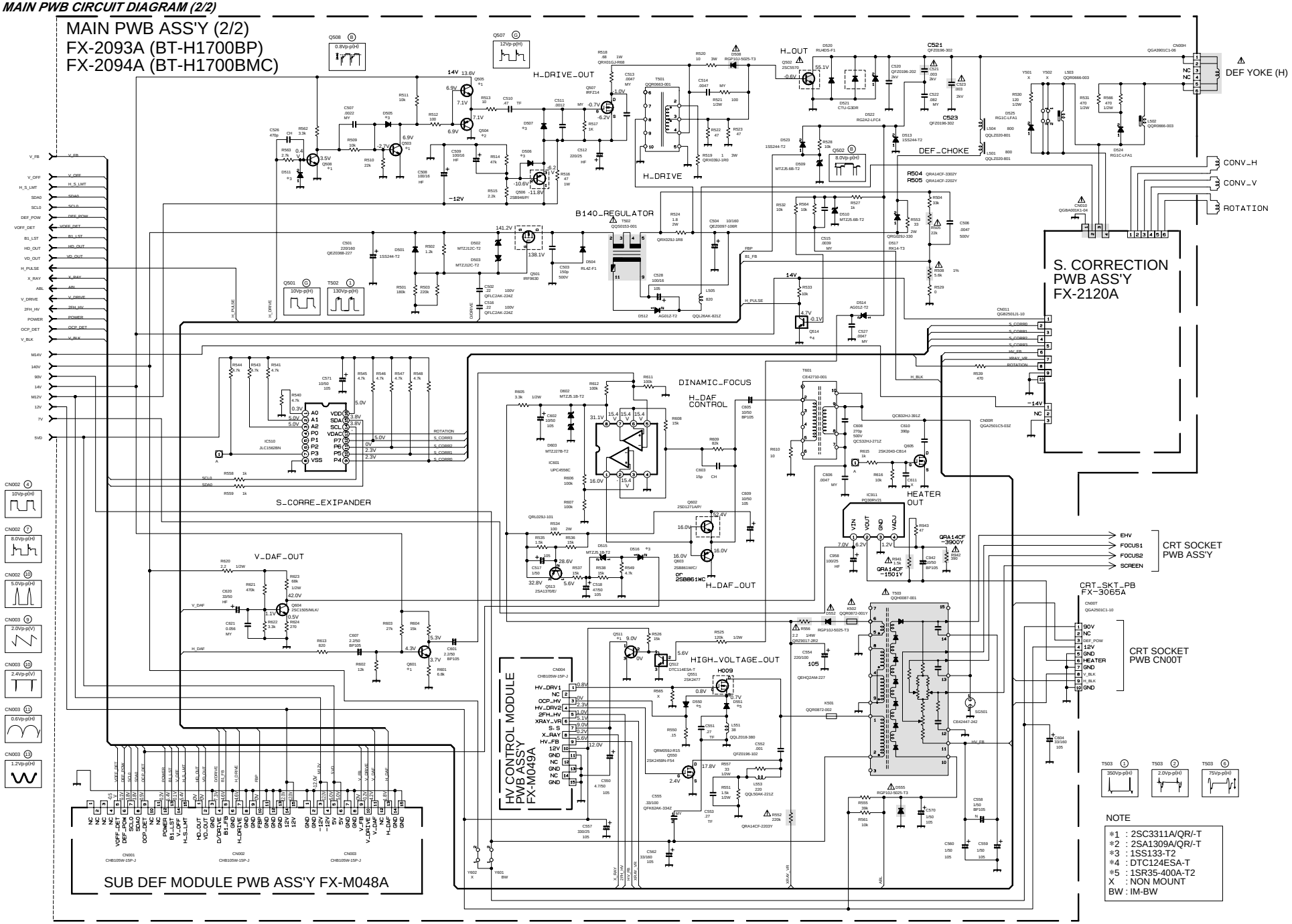

NOTE

*1 : 2SC3311A/QR/-T
*2 : 2SA1309A/QR/-T
*3 : 1SS133-T2
*4 : DTC124ESA-T
*5 : 1SR35-400A-T2
X : NON MOUNT
BW : IM-BW

S. CORRECTION PWB CIRCUIT DIAGRAM

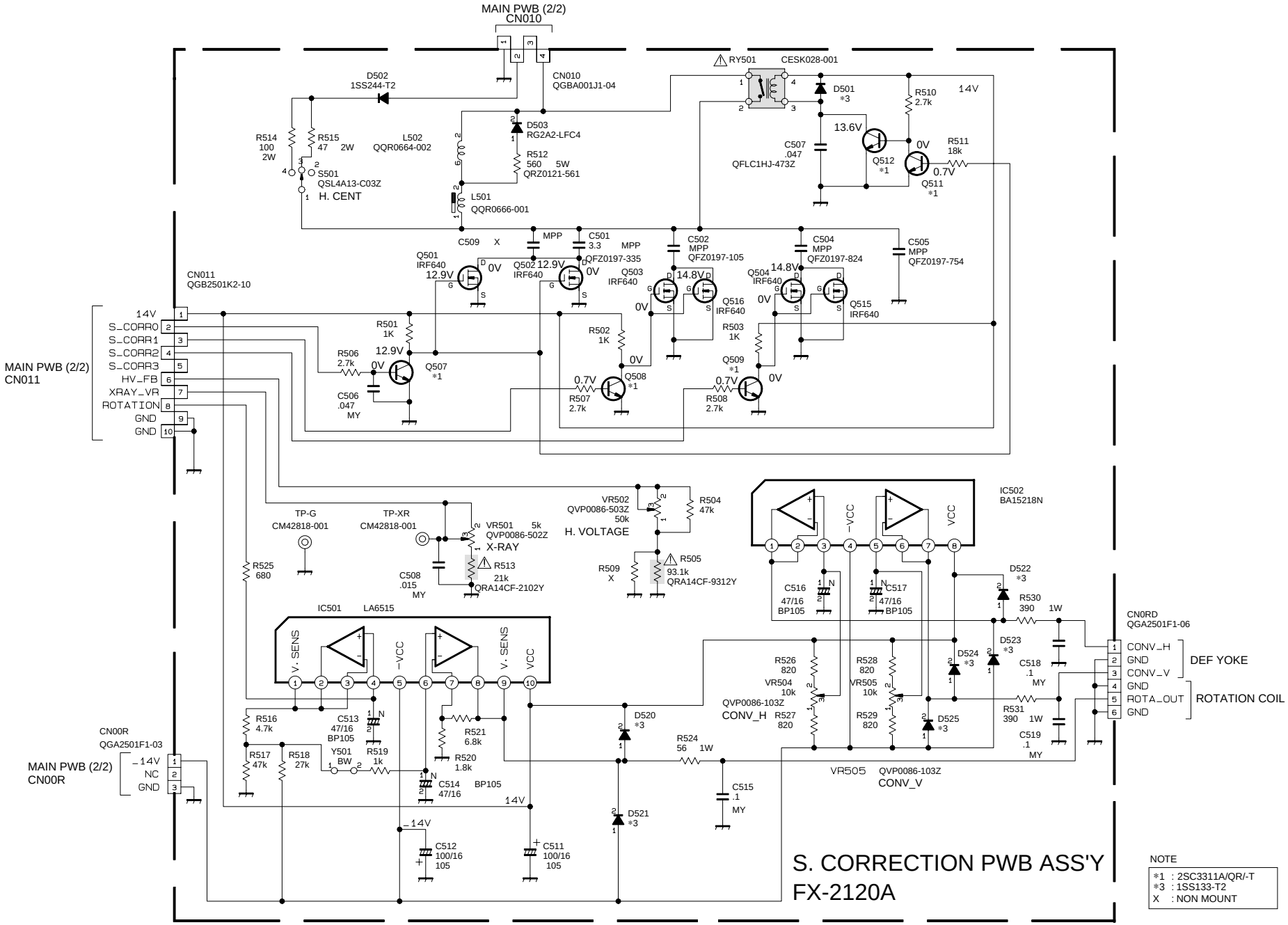

CRT SOCKET PWB CIRCUIT DIAGRAM

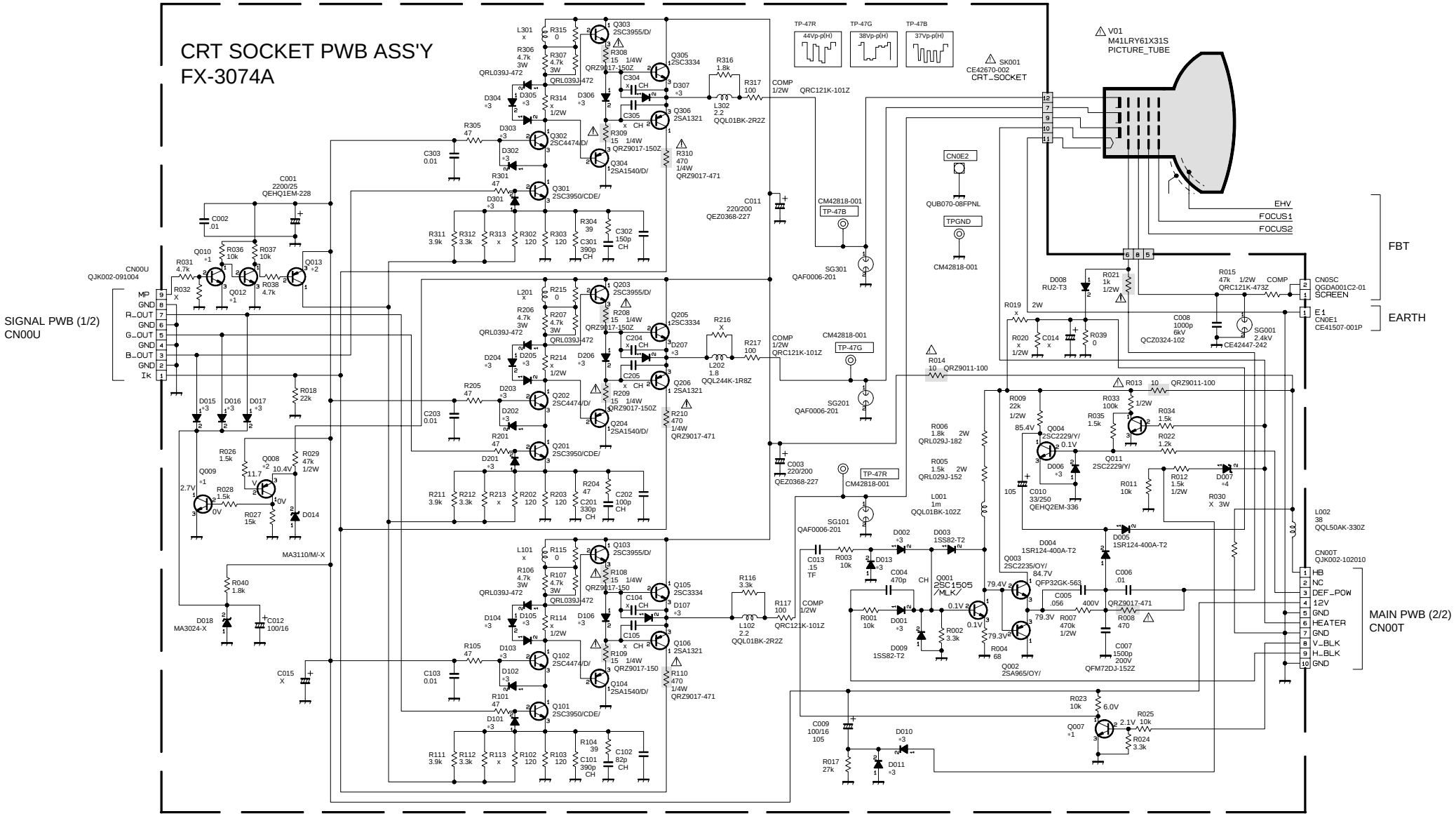

FRONT CONTROL PWB AND FRONT VR PWB CIRCUIT DIAGRAMS

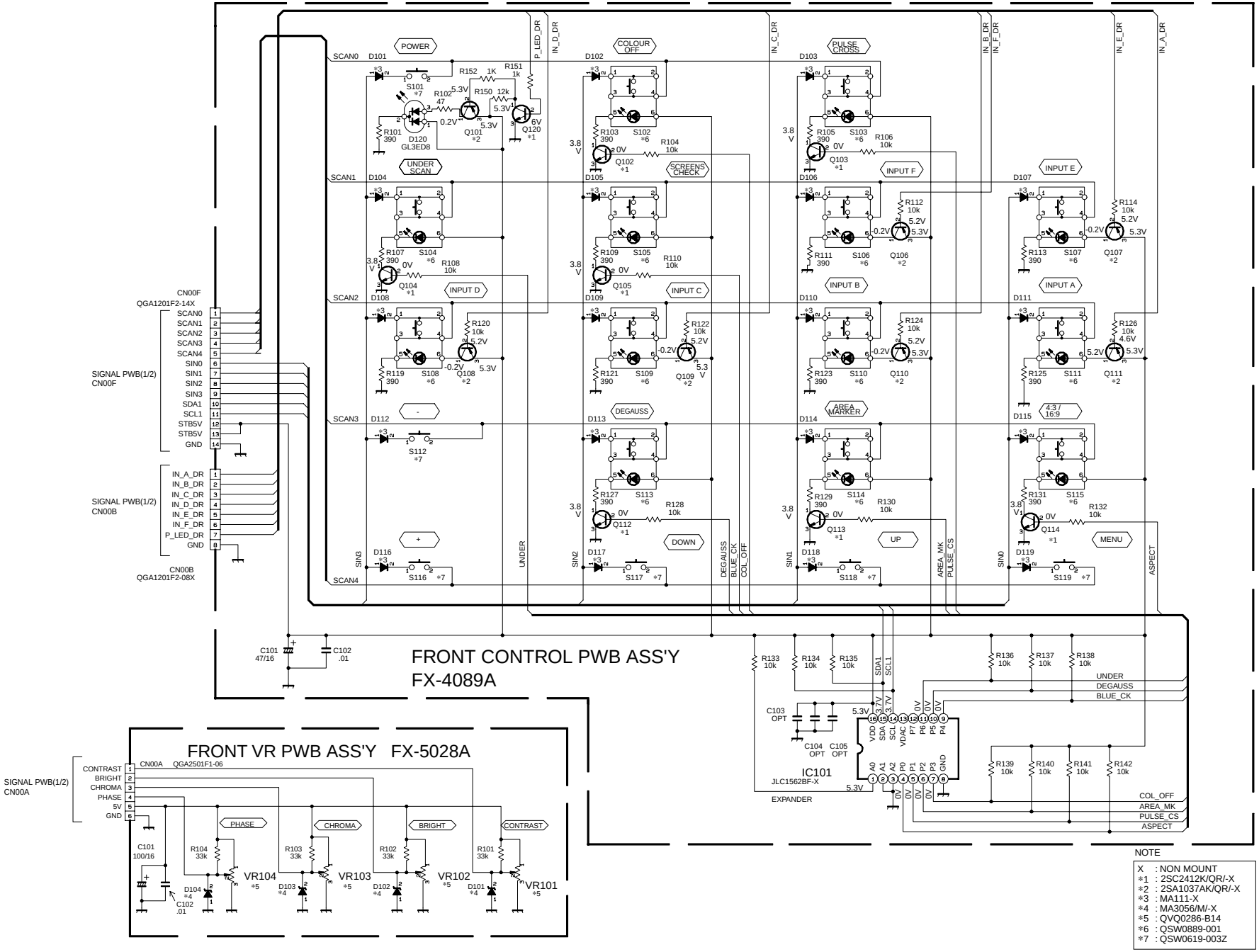

NOTE

X : NON MOUNT
*1 : 2SC2412K/QR/-X
*2 : 2SA1037AK/QR/-X
*3 : MA111-X
*4 : MA3056/M/-X
*5 : QVQ0286-B14
*6 : QSW0889-001
*7 : QSW0619-003Z

MOTHER PWB CIRCUIT DIAGRAM

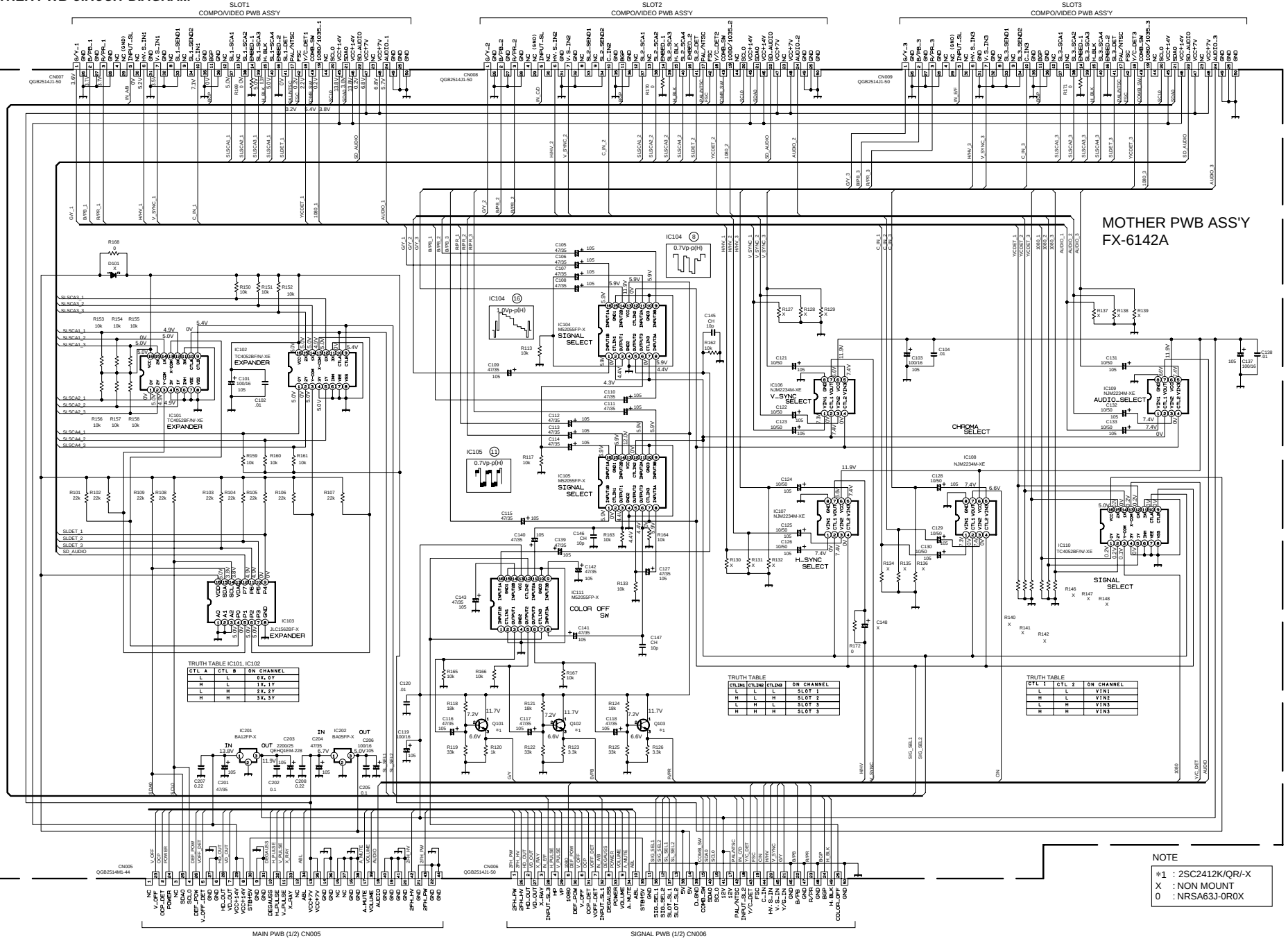

REMOTE PWB CIRCUIT DIAGRAM

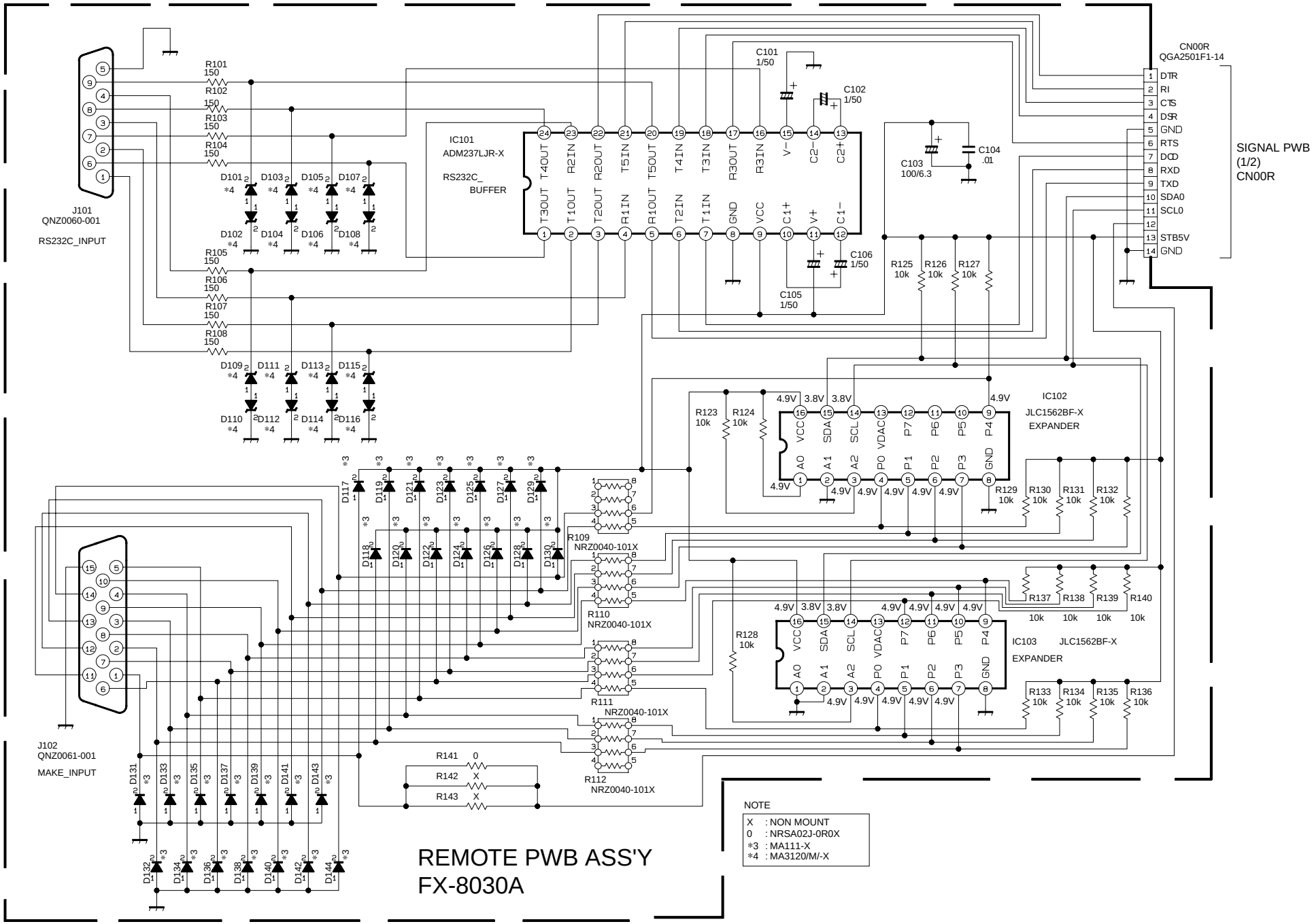

SUB DEF MODULE PWB CIRCUIT DIAGRAM

The schematic diagram is only for reference. Avoid replacing individual parts. Replace entire unit only.

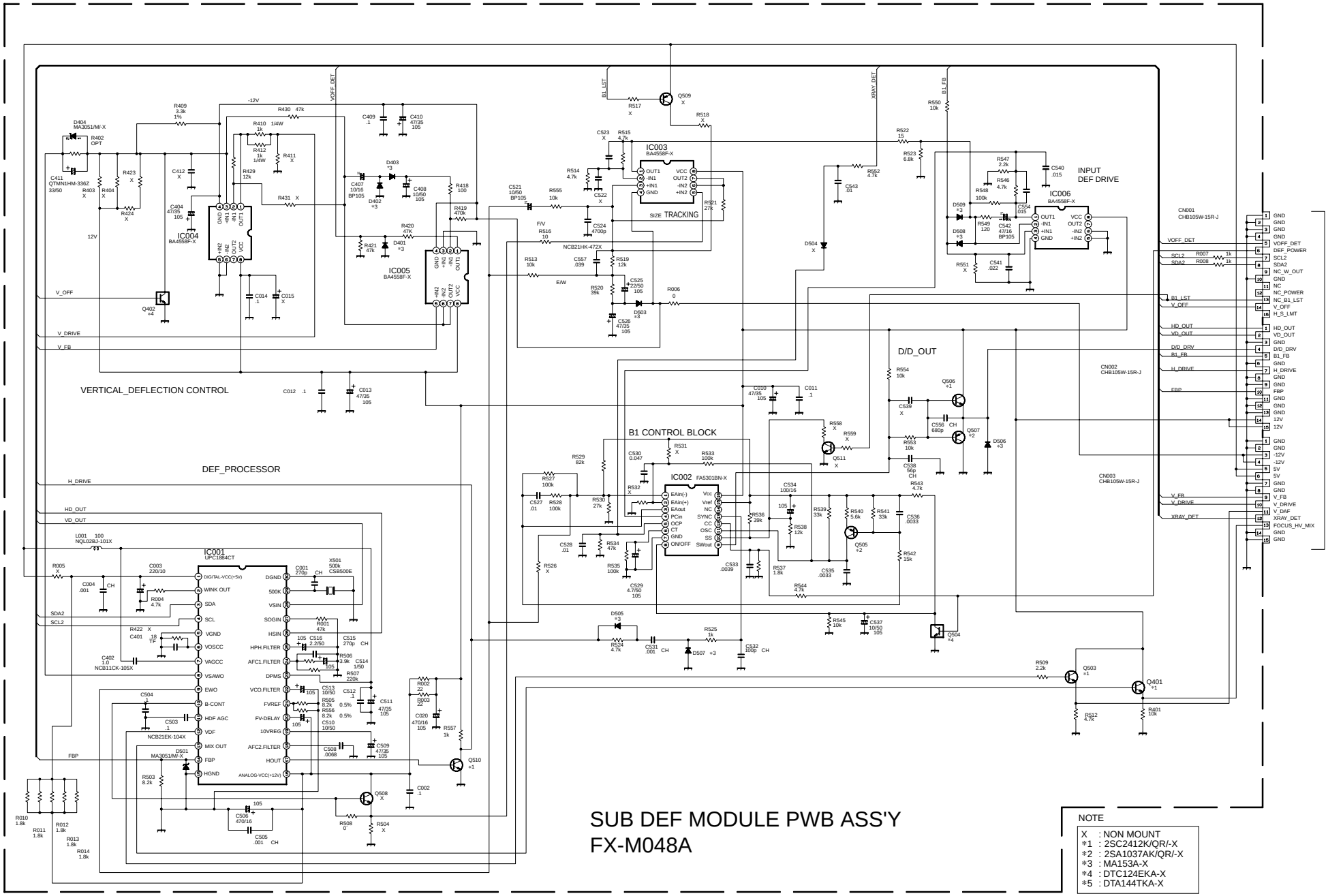

SUB DEF MODULE PWB ASS'Y
FX-M048A

NOTE

X	: NON MOUNT
*1	: 2SC2412K/QR/-X
*2	: 2SA1037AK/QR/-X
*3	: MA153A-X
*4	: DTC124EKA-X
*5	: DTA144TKA-X

HV CONTROL MODULE PWB CIRCUIT DIAGRAM

The schematic diagram is only for reference. Avoid replacing individual parts.
Replace entire unit only.

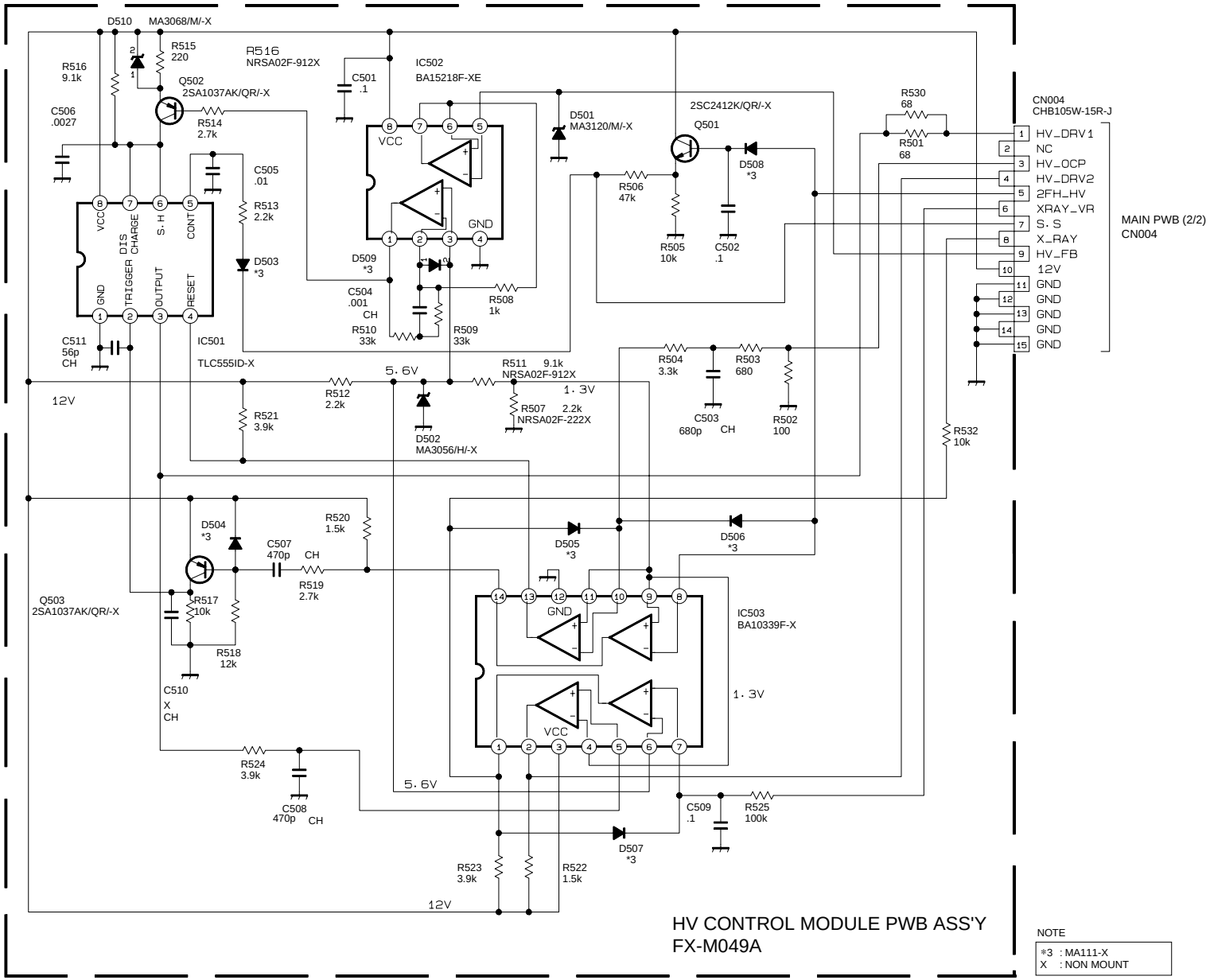

HV CONTROL MODULE PWB ASS'Y
FX-M049A

NOTE

*3	: MA111-X
X	: NON MOUNT

SECTION 5

CIRCUIT BOARD DIAGRAMS

NOTE:
BE SURE TO MAKE YOUR ORDERS OF REPLACEMENT PARTS ACCORDING TO PARTS LIST, SECTION 6

CAUTION

THE ▭ MARK INDICATES THE PRIMARY CIRCUIT TO DISTINGUISH THE PRIMARY FROM THE SECONDARY CIRCUIT.
PAY ATTENTION NOT TO RECEIVE AN ELECTRIC SHOCK DURING REPAIR AND SERVICE OF THE PRODUCTS.

IMPORTANT SAFETY NOTICE:
COMPONENTS IDENTIFIED WITH THE MARK ⚠ HAVE THE SPECIAL CHARACTERISTICS FOR SAFETY.
WHEN REPLACING ANY OF THESE COMPONENTS, USE ONLY THE SAME TYPE.

CONTENTS

MAIN PWB PATTERN CBA-1
SIGNAL PWB PATTERN (SOLDER SIDE) CBA-2
SIGNAL PWB PATTERN (PARTS SIDE) CBA-3
S. CORRECTION PWB PATTERN (SOLDER SIDE) CBA-4
S. CORRECTION PWB PATTERN (PARTS SIDE) CBA-4
REMOTE PWB PATTERN (SOLDER SIDE) CBA-4
REMOTE PWB PATTERN (PARTS SIDE) CBA-4
CRT SOCKET PWB PATTERN (SOLDER SIDE) CBA-5
CRT SOCKET PWB PATTERN (PARTS SIDE) CBA-5
LED PWB PATTERN (SOLDER SIDE) CBA-5
LED PWB PATTERN (PARTS SIDE) CBA-5
FRONT CONTROL PWB PATTERN (SOLDER SIDE) CBA-6
FRONT VR PWB PATTERN (SOLDER SIDE) CBA-6
MOTHER PWB PATTERN (SOLDER SIDE) CBA-6
FRONT CONTROL PWB PATTERN (PARTS SIDE) CBA-7
FRONT VR PWB PATTERN (PARTS SIDE) CBA-7
MOTHER PWB PATTERN (PARTS SIDE) CBA-7

PATTERN DIAGRAMS

MAIN PWB PATTERN

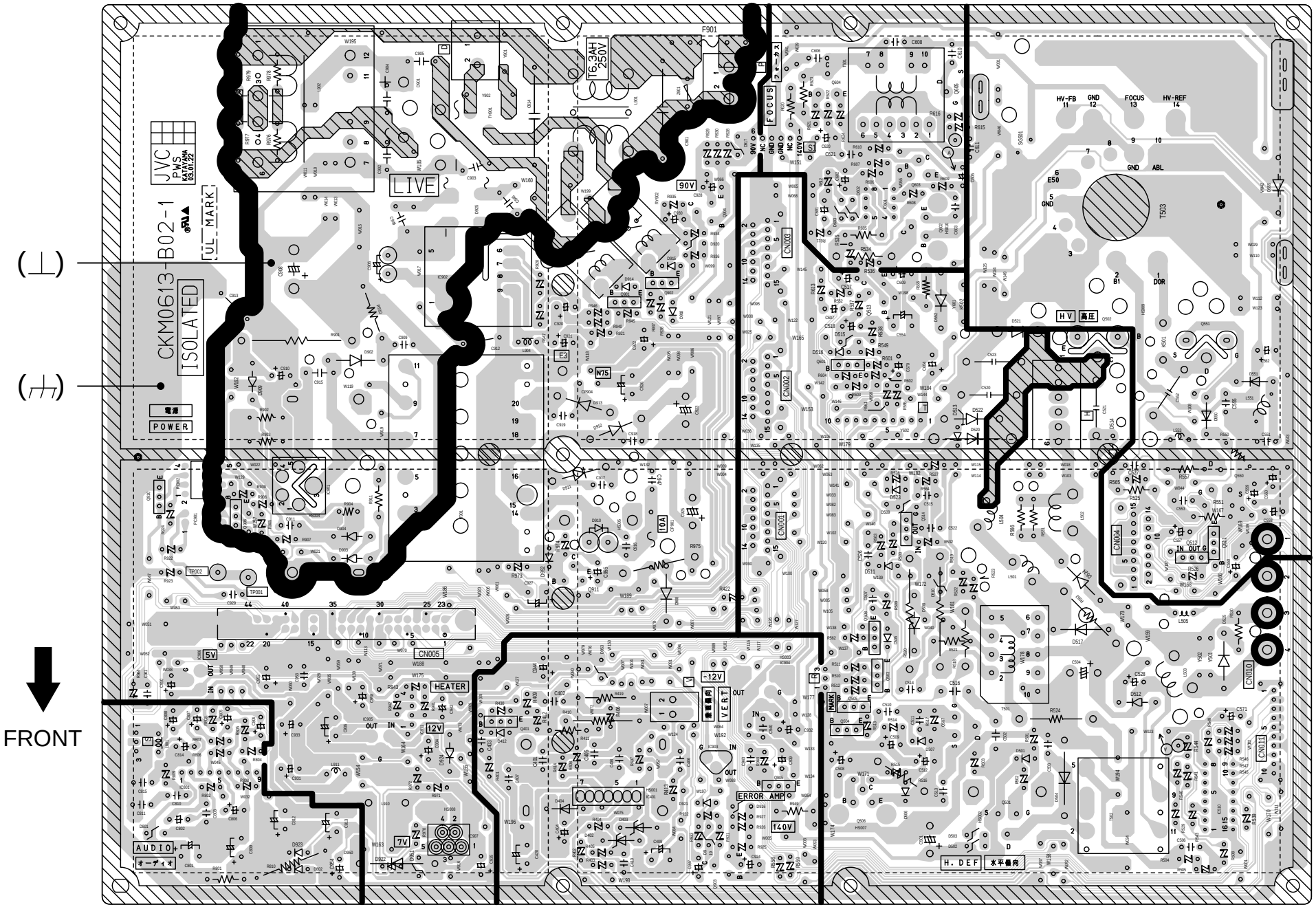

SIGNAL PWB PATTERN (SOLDER SIDE)

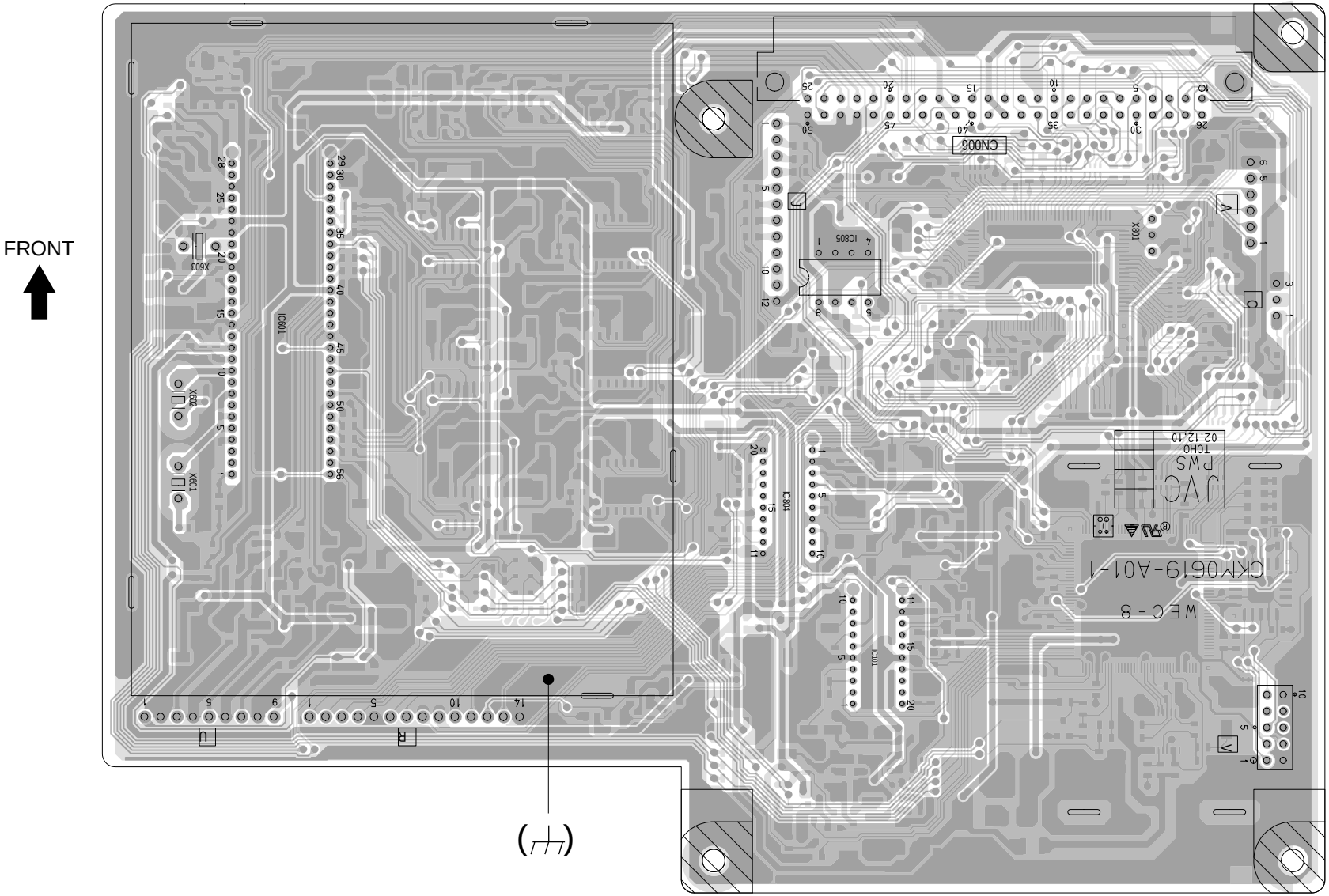

SIGNAL PWB PATTERN (PARTS SIDE)

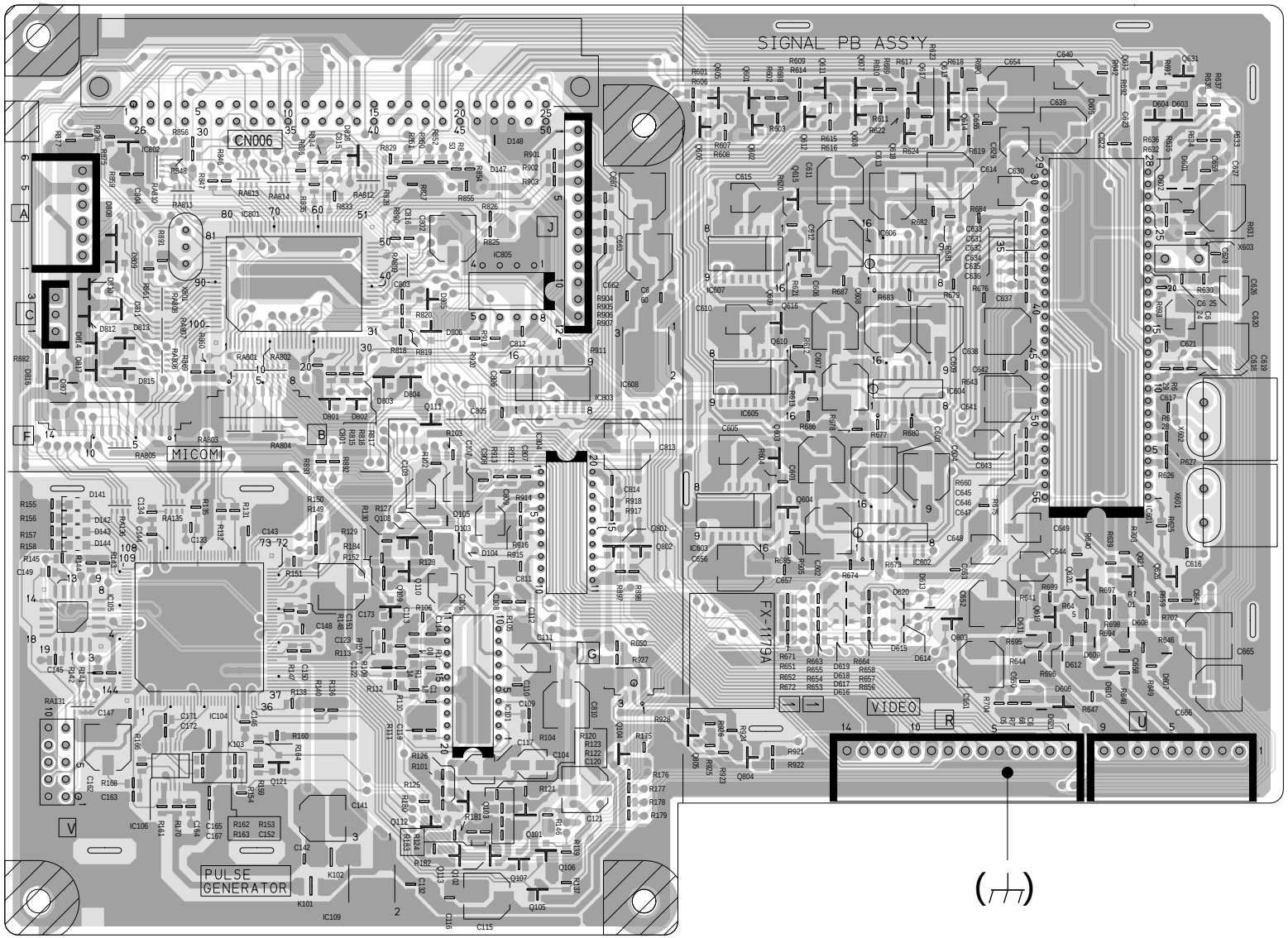

S. CORRECTION PWB PATTERN (SOLDER SIDE)

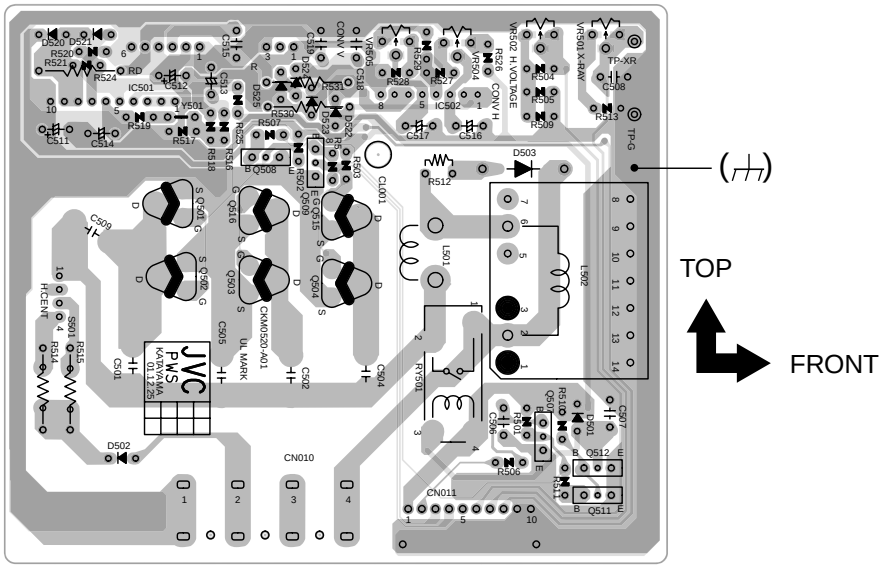

S. CORRECTION PWB PATTERN (PARTS SIDE)

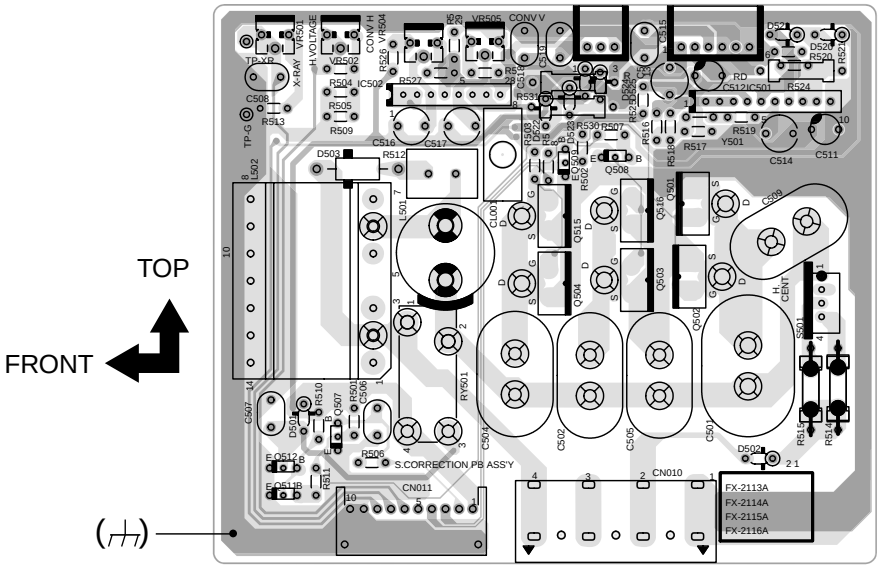

REMOTE PWB PATTERN (SOLDER SIDE)

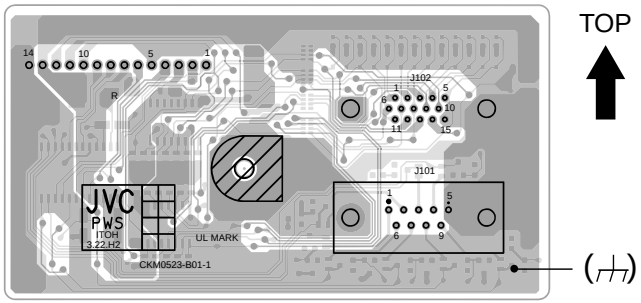

REMOTE PWB PATTERN (PARTS SIDE)

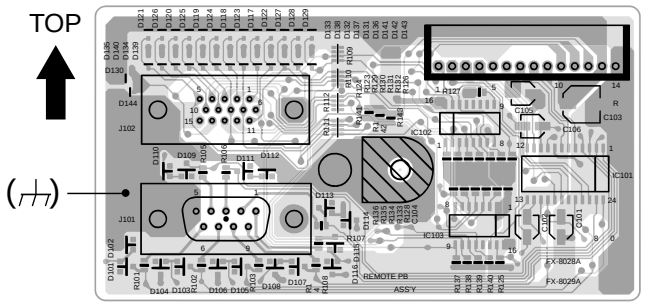

CRT SOCKET PWB PATTERN (SOLDER SIDE)

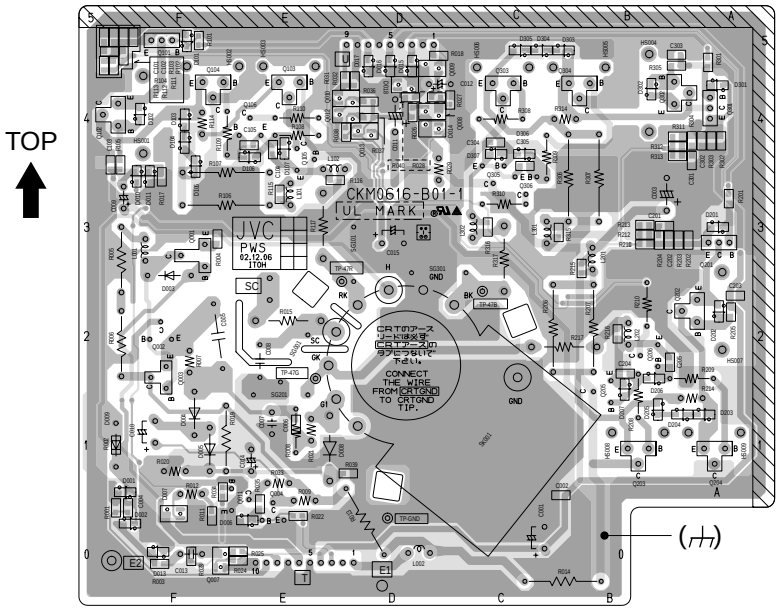

CRT SOCKET PWB PATTERN (PARTS SIDE)

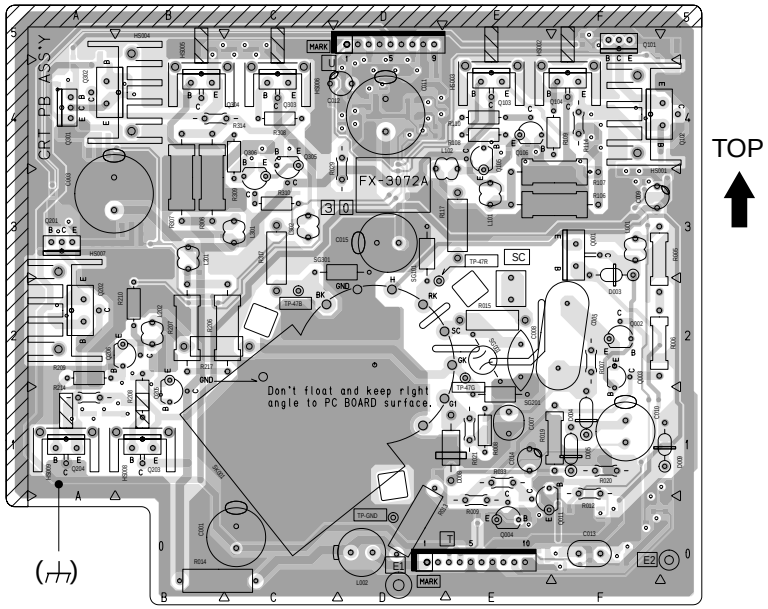

LED PWB PATTERN (SOLDER SIDE)

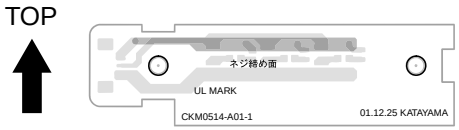

LED PWB PATTERN (PARTS SIDE)

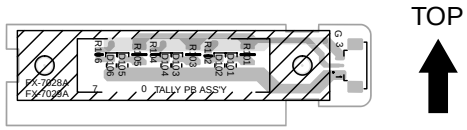

FRONT CONTROL PWB PATTERN (SOLDER SIDE)

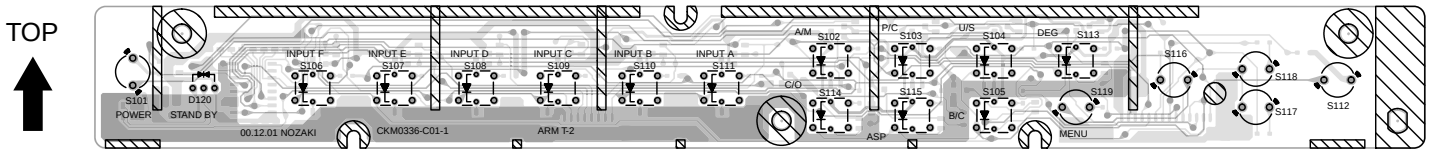

FRONT VR PWB PATTERN (SOLDER SIDE)

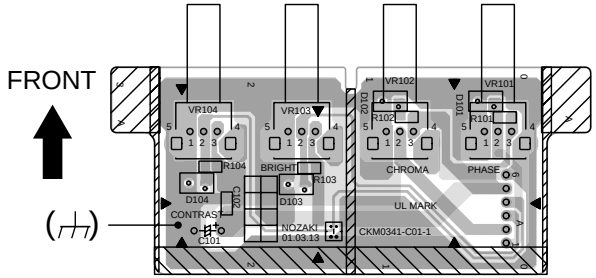

MOTHER PWB PATTERN (SOLDER SIDE)

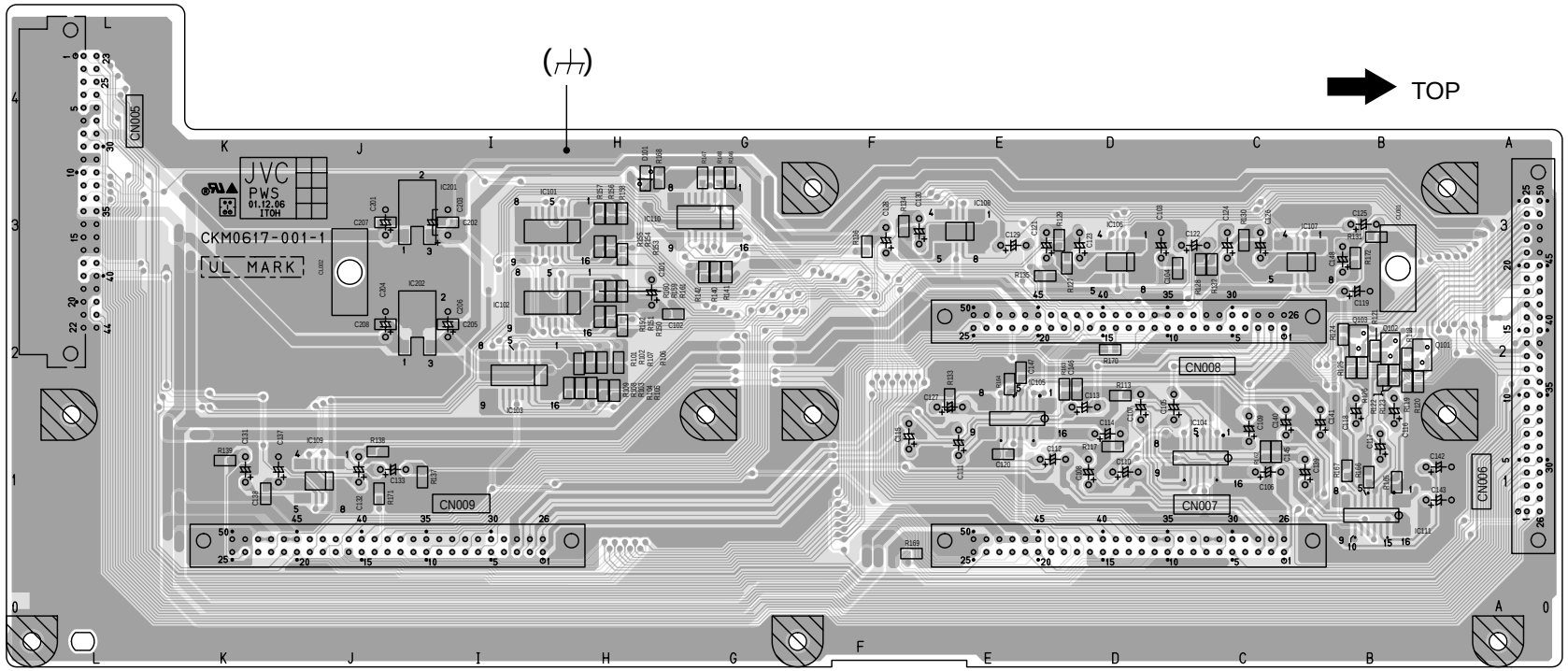

FRONT CONTROL PWB PATTERN (PARTS SIDE)

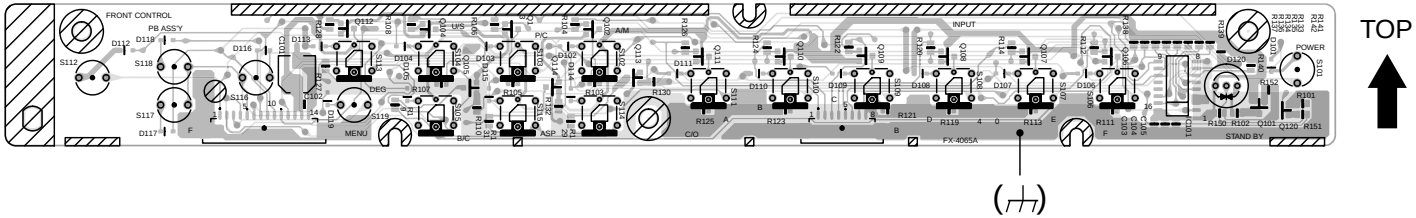

FRONT VR PWB PATTERN (PARTS SIDE)

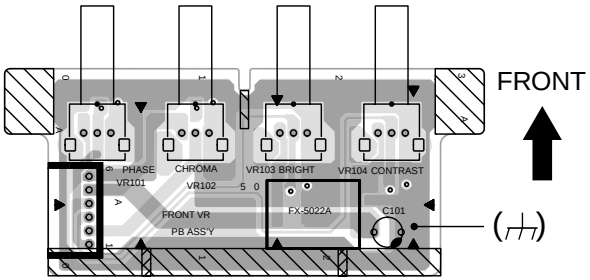

MOTHER PWB PATTERN (PARTS SIDE)

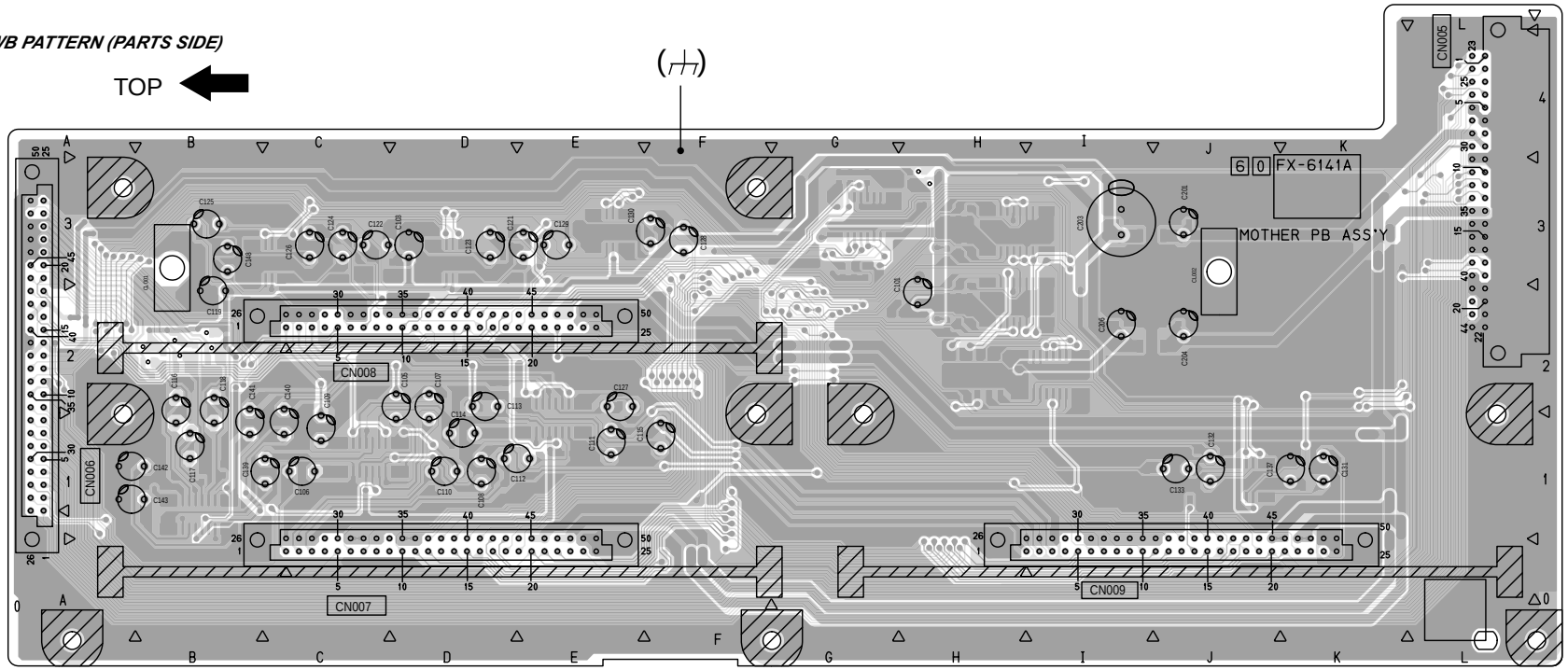

SECTION 6

EXPLODED VIEWS
&
REPLACEMENT PARTS LIST

Note:

1. *Be sure to make your orders of replacement parts according to this list.
2. Unless otherwise specified, all resistors are in OHMS, K=1,000 OHMS, all capacitors are in MICROFARADS (μF), P=μμF.
3. The P.C. Board unit marked with "■" shown below the main assembled parts.
4. The parts marked with Ⓔ on the exploded view show the electric parts.
5. IMPORTANT SAFETY NOTICE
   Components identified with the mark ⚠ have the special characteristics for safety. When replacing any of these components, use only the same type.
6. The marking (RTL) indicates the retention time is limited for this item.
   After the discontinuation of this assembly in production, it will no longer be available.
7. "M" in Remark column indicates needed in the periodical maintenance.

CONTENTS

CASING PARTS ASSEMBLY PRT-1

CHASSIS FRAME ASSEMBLY PRT-3

PACKING PARTS ASSEMBLY.....PRT-5

ELECTRICAL REPLACEMENT PARTS LIST EPL-1

CASING PARTS ASSEMBLY

Components identified with the mark ⚠ have the special characteristics for safety.
When replacing any of these components, use only the same type.

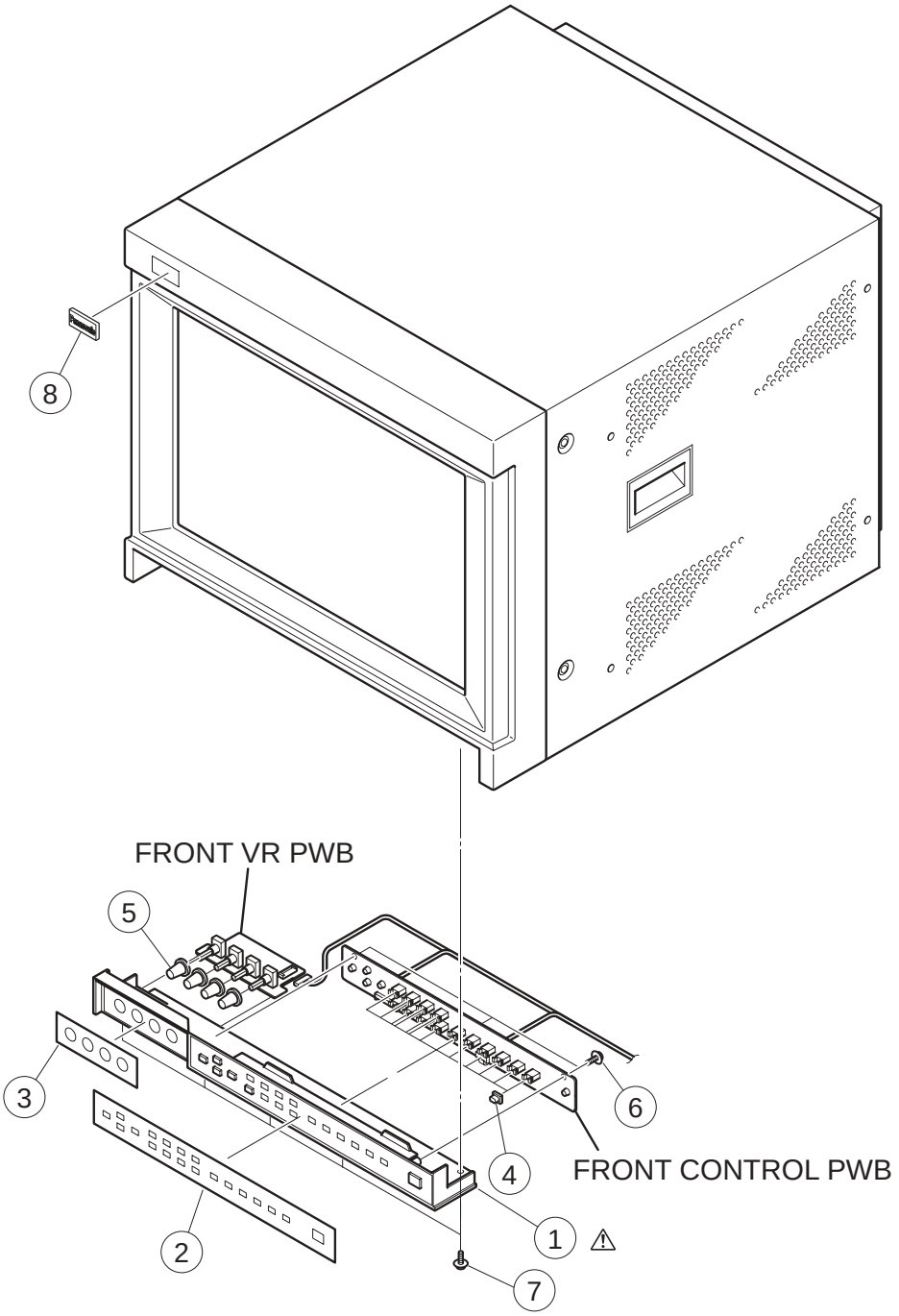

Components identified with the mark ⚠ have special characteristics for safety.
When replacing any of these component, use only the same type.

CASING PARTS ASSEMBLY

Ref.No.	Part No.	Part Name & Description	Pcs	Remarks
⚠ 1	LC20620-002A	CONTROL BASE	1	
2	LC31229-005A	CONTROL SHEET	1	
3	LC31230-002A	VOLUME SHEET	1	
4	LC40814-001A	PUSH BUTTON	13	
5	CM46758-005	CONTROL KNOB	4	
6	QYSBSFG3010Z	TAP SCREW	3	M3 X 10MM
7	QYSBSF4012Z	TAP SCREW	5	
8	CM48151-010	PANASONIC MARK	1	

Ref.No.	Part No.	Part Name & Description	Pcs	Remarks

CHASSIS FRAME ASSEMBLY

Components identified with the mark ⚠ have the special characteristics for safety.
When replacing any of these components, use only the same type.

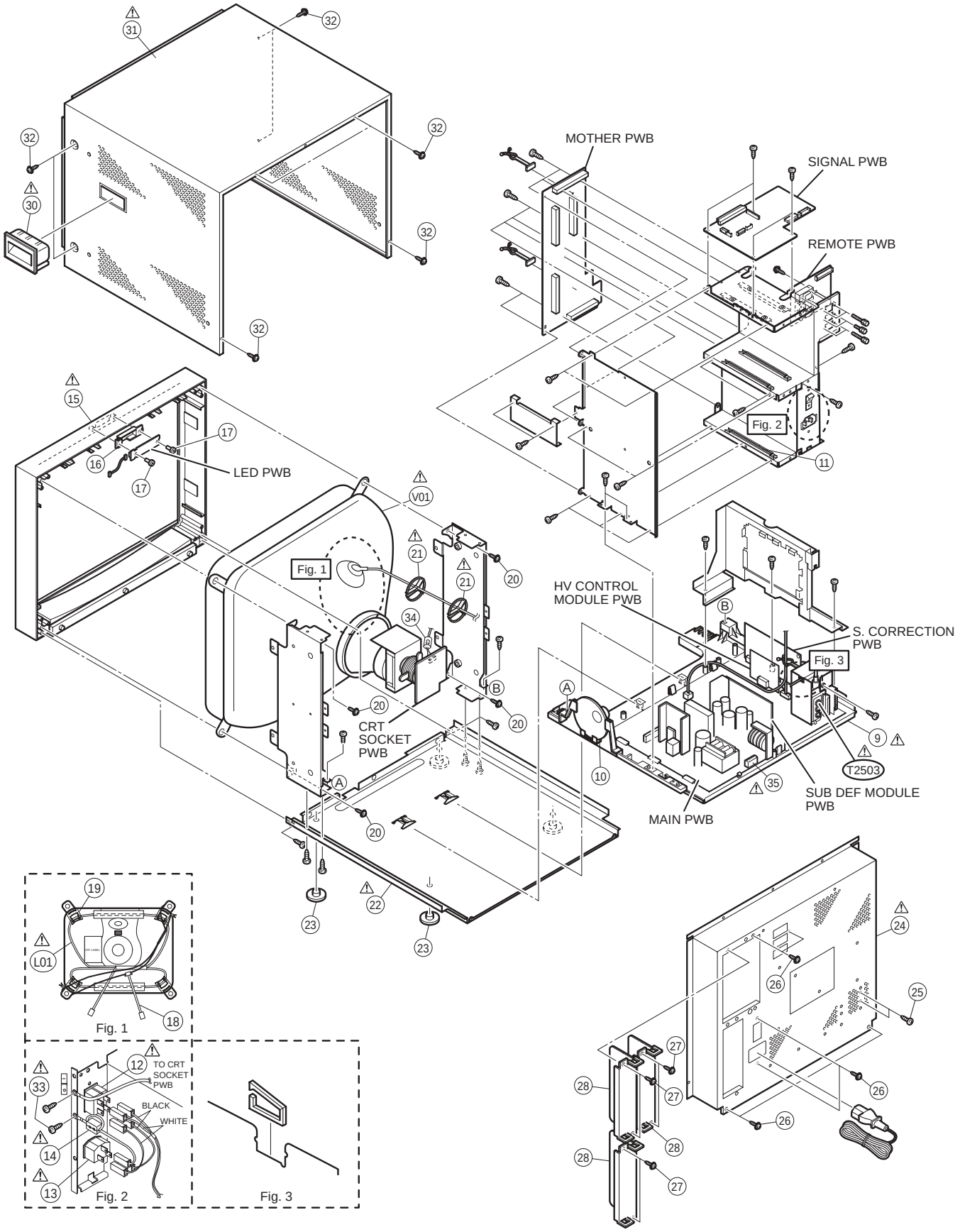

Components identified with the mark ⚠ have special characteristics for safety.
When replacing any of these component, use only the same type.

CHASSIS FRAME ASSEMBLY

Ref.No.	Part No.	Part Name & Description	Pcs	Remarks
⚠ 9	LC10868-001B	CHASSIS BASE	1	
10	CEBSS08P-01K	SPEAKER	1	SP01
11	QZW0046-001	GUIDE RAIL	6	
⚠ 12	QSW0699-001	SEESAW SWITCH	1	
⚠ 13	QMCB004-001	AC INLET	1	
⚠ 14	QQR0490-001	CORE FILTER	1	
⚠ 15	LC10867-002A	FRONT PANEL	1	
16	LC40815-001A	TALLY LENS	1	
17	QYSBSFG3010Z	TAP SCREW	2	M3 X 10MM
18	CHGT0011-AAN	RECEP WIRE ASS'Y	1	
19	CHM2032-45F	DEG CLAMP	4	
20	CM48275-001	ASSY SCREW	4	
⚠ 21	CM30964-001	SPACER RING	2	
⚠ 22	LC11052-001A	BOTTOM COVER	1	
23	CM47686-00A	FOOT	4	
⚠ 24	LC11053-002A	REAR COVER	1	
25	QYSBSF4012Z	TAP SCREW	2	
26	CM44287-00C	ASSY SCREW	4	
27	CM44287-00E	ASSY SCREW	3	
28	LC31464-003A	SLOT PANEL	3	
⚠ 30	LC20914001BH	HANDLE	2	
⚠ 31	LC10270-014B	TOP COVER	1	
32	CM44287-00C	ASSY SCREW	8	
⚠ 33	CM44287-00E	ASSY SCREW	1	
34	QQR0942-001	CORE FILTER	1	
⚠ 35	CM48184-001	FUSE COVER	1	
⚠ V01	M41LRY61X31S	PICTURE TUBE(ITC)	1	Inc.DEF YOKE
⚠ L01	QQW0112-001	COIL	1	
⚠ T2503	QQH0087-001	TRANSFORMER	1	

PACKING PARTS ASSEMBLY

Components identified with the mark ⚠ have the special characteristics for safety.
When replacing any of these components, use only the same type.

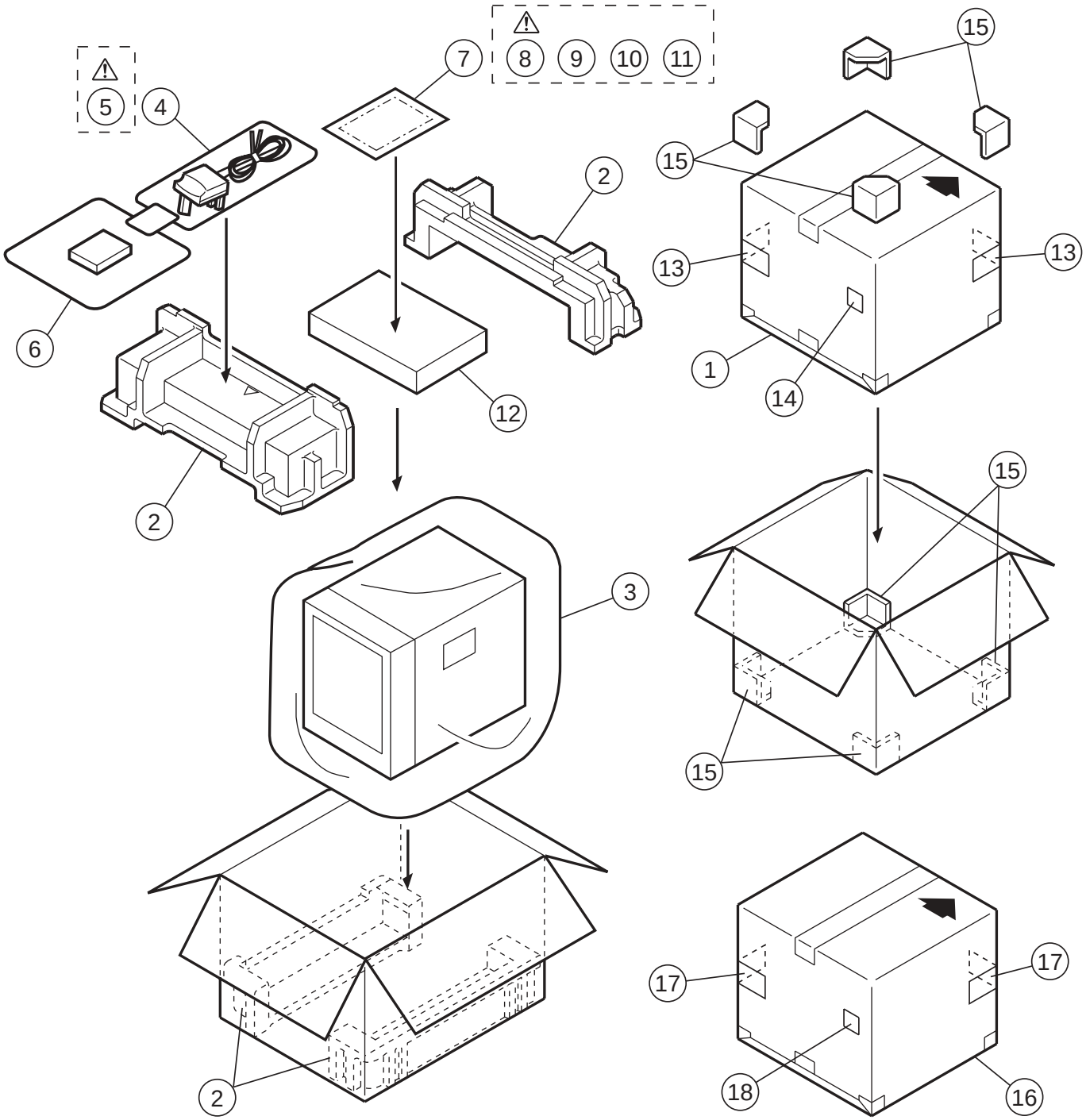

Components identified with the mark ⚠ have special characteristics for safety.
When replacing any of these component, use only the same type.

PACKING PARTS ASSEMBLY

Ref.No.	Part No.	Part Name & Description	Pcs	Remarks
1	LC10275-065A	PACKING CASE	1	
2	LC11646-001A	CUSHION ASS'Y	1	4PCS IN 1SET
3	CP30967003-H	POLY BAG	1	
4	QPA01203005	POLY BAG	1	FOR BT-H1700BP
⚠ 5	QMP1110-244K	POWER CORD	1	FOR BT-H1700BP
⚠ 5	QMPS210200-J	POWER CORD	1	FOR BT-H1700BMC
6	LC41257-001A	STOPPER ASS'Y	1	
7	QPA02503505P	POLY BAG	1	
⚠ 8	LCT1464-001A	INST BOOK	1	FOR BT-H1700BP
⚠ 8	LCT1465-001A	INST BOOK	1	FOR BT-H1700BMC
9	VQA0690	WARRANTY CARD	1	
10	VQA0689	SERVICE S.GUIDE	1	
11	VQA0536	WARRANTY CARD	1	
12	LC20758-004A	WIDE MASK ASS'Y	1	
13	LC21013-006A	CARTON LABEL	2	FOR BT-H1700BP
14	CM36338-001	POS SERIAL LABEL	1	FOR BT-H1700BP
15	VPN1900	CORNER PAD	8	FOR BT-H1700BMC
16	LC10275-066A	PACKING CASE	1	FOR BT-H1700BMC
17	LC21013-007A	CARTON LABEL	2	FOR BT-H1700BMC
18	CM36338-001R	POS SERIAL LABEL	1	FOR BT-H1700BMC

Components identified with the mark ⚠ have special characteristics for safety.
When replacing any of these component, use only the same type.

ELECTRICAL REPLACEMENT PARTS LIST

BT-LH1700BP

Ref.No.	Part No.	Part Name & Description	Pcs	Remarks
■	FX-1186A	SIGNAL P.C.BOARD	1	(RTL)
■	FX-2093A	MAIN P.C.BOARD	1	(RTL)
■	FX-2120A	S.CORRECTION P.C.BOARD	1	(RTL)
■	FX-3074A	CRT SOCKET P.C.BOARD	1	(RTL)
■	FX-4089A	FRONT CONTROL P.C.BOARD	1	(RTL)
■	FX-5028A	FRONT VR P.C.BOARD	1	(RTL)
■	FX-6142A	MOTHER P.C.BOARD	1	(RTL)
■	FX-7055A	LED P.C.BOARD	1	(RTL)
■	FX-8030A	REMOTE P.C.BOARD	1	(RTL)
■	FX-M048A	SUB DEF MODULE	1	(RTL)
■	FX-M049A	HV CONTROL MODULE P.C.B.	1	(RTL)
■	FX-1186A	SIGNAL P.C.BOARD	1	(RTL)
C1103	NEH71HM-474X	E.CAPACITOR 50V 0.47U	1	
C1104	NEN51HM-105X	E.CAPACITOR 50V 1U	1	
C1106	NEH71EM-475X	E.CAPACITOR 25V 4.7U	1	
C1107	NEN51CM-475X	E.CAPACITOR 16V 4.7U	1	
C1108	NEH71EM-475X	E.CAPACITOR 25V 4.7U	1	
C1109	NCB21HK-472X	C.CAPACITOR 50V 4700P	1	
C1110	NCB21EK-683X	C.CAPACITOR 25V 0.068U	1	
C1111	NEH71HM-105X	E.CAPACITOR 50V 1U	1	
C1112	NCB21HK-103X	C.CAPACITOR 50V 0.01U	1	
C1113	NDC21HJ-121X	C.CAPACITOR 50V 120P	1	
C1114	NDC21HJ-820X	C.CAPACITOR 50V 82P	1	
C1115	NEH70JM-107X	E.CAPACITOR 6.3V 100U	1	
C1116	NCF21HZ-103X	C.CAPACITOR 50V 0.01U	1	
C1117	NEH71CM-106X	E.CAPACITOR 16V 10U	1	
C1118	NCF21HZ-103X	C.CAPACITOR 50V 0.01U	1	
C1119	NDC21HJ-101X	C.CAPACITOR 50V 100P	1	
C1121	NEH71CM-476X	E.CAPACITOR 16V 47U	1	
C1122	NDC21HJ-330X	C.CAPACITOR 50V 33P	1	
C1123	NCB21HK-102X	C.CAPACITOR 50V 1000P	1	
C1132	NCF21HZ-104X	C.CAPACITOR 50V 0.1U	1	
C1133	NDC21HJ-100X	C.CAPACITOR 50V 10P	1	
C1134	NDC21HJ-271X	C.CAPACITOR 50V 270P	1	
C1141	NEH70JM-107X	E.CAPACITOR 6.3V 100U	1	
C1142-48	NCF21HZ-104X	C.CAPACITOR 50V 0.1U	7	
C1149	NCB20JM-475X	C.CAPACITOR 6.3V 4.7U	1	
C1150	NCB21HK-103X	C.CAPACITOR 50V 0.01U	1	
C1151	NCB21HK-152X	C.CAPACITOR 50V 1500U	1	
C1162	NEH70GM-227X	E.CAPACITOR 4V 220U	1	
C1163	NCF21HZ-224X	C.CAPACITOR 50V 0.22U	1	
C1164,65	NCF21HZ-104X	C.CAPACITOR 50V 0.1U	2	
C1167	NCB20JM-475X	C.CAPACITOR 6.3V 4.7U	1	
C1168	QEHR1EM-107Z	E.CAPACITOR 25V 100U	1	
C1171,72	NDC21HJ-220X	C.CAPACITOR 50V 22P	2	
C1173	NEH70JM-107X	E.CAPACITOR 6.3V 100U	1	
C1601-04	NEN51AM-336X	E.CAPACITOR 10V 33U	4	

Ref.No.	Part No.	Part Name & Description	Pcs	Remarks
C1605	NEH71HM-225X	E.CAPACITOR 50V 2.2U	1	
C1606-09	NEN51AM-336X	E.CAPACITOR 10V 33U	4	
C1610	NEH71HM-225X	E.CAPACITOR 50V 2.2U	1	
C1611-14	NEN51AM-336X	E.CAPACITOR 10V 33U	4	
C1615	NEH71HM-225X	E.CAPACITOR 50V 2.2U	1	
C1616,17	NDC21HJ-120X	C.CAPACITOR 50V 12P	2	
C1618	NCB21CK-224X	C.CAPACITOR 16V 0.22U	1	
C1619	NCF21HZ-223X	C.CAPACITOR 50V 0.22U	1	
C1620	NEH71CM-476X	E.CAPACITOR 16V 47U	1	
C1621	NCF21HZ-103X	C.CAPACITOR 50V 0.01U	1	
C1622,23	NCB21EK-104X	C.CAPACITOR 25V 0.1U	2	
C1624	NEH71HM-225X	E.CAPACITOR 50V 2.2U	1	
C1625	NCB21HK-223X	C.CAPACITOR 50V 0.022U	1	
C1626	NEH71CM-106X	E.CAPACITOR 16V 10U	1	
C1627	NEH71AM-107X	C.CAPACITOR 10V 100U	1	
C1628	NCF21HZ-103X	C.CAPACITOR 50V 0.01U	1	
C1629,30	NEH71HM-225X	E.CAPACITOR 50V 2.2U	2	
C1631-36	NCB21EK-104X	C.CAPACITOR 25V 0.1U	6	
C1637	NCF21HZ-103X	C.CAPACITOR 50V 0.01U	1	
C1638	NEH71AM-107X	C.CAPACITOR 10V 100U	1	
C1639	NEH71CM-476X	E.CAPACITOR 16V 47U	1	
C1640	NEH71HM-105X	E.CAPACITOR 50V 1U	1	
C1641	NEH71AM-107X	C.CAPACITOR 10V 100U	1	
C1642	NCF21HZ-103X	C.CAPACITOR 50V 0.01U	1	
C1643	NEH71HM-225X	E.CAPACITOR 50V 2.2U	1	
C1644	NEH71CM-106X	E.CAPACITOR 16V 10U	1	
C1645	NCB21EK-104X	C.CAPACITOR 25V 0.1U	1	
C1646,47	NCB21CK-474X	C.CAPACITOR 16V 0.47U	2	
C1648,49	NEH71HM-225X	E.CAPACITOR 50V 2.2U	2	
C1651,52	NEH71AM-107X	C.CAPACITOR 10V 100U	2	
C1653	NCF21HZ-103X	C.CAPACITOR 50V 0.01U	1	
C1654	NEH71CM-476X	E.CAPACITOR 16V 47U	1	
C1655	NCF21HZ-103X	C.CAPACITOR 50V 0.01U	1	
C1656	NEH71AM-107X	C.CAPACITOR 10V 100U	1	
C1657,58	NCF21HZ-103X	C.CAPACITOR 50V 0.01U	2	
C1659	NDC21HJ-151X	C.CAPACITOR 50V 150P	1	
C1660	NCB21EK-104X	C.CAPACITOR 25V 0.1U	1	
C1662	NCB21EK-104X	C.CAPACITOR 25V 0.1U	1	
C1663	NEH71AM-107X	C.CAPACITOR 10V 100U	1	
C1664	NCB21EK-104X	C.CAPACITOR 25V 0.1U	1	
C1665-67	NEH71AM-107X	C.CAPACITOR 10V 100U	3	
C1668	NDC21HJ-271X	C.CAPACITOR 50V 270P	1	
C1801	NCF21HZ-104X	C.CAPACITOR 50V 0.1U	1	
C1802	NEH70JM-107X	E.CAPACITOR 6.3V 100U	1	
C1803	NCF21HZ-103X	C.CAPACITOR 50V 0.01U	1	
C1804	NDC21HJ-271X	C.CAPACITOR 50V 270P	1	
C1806	NCF21HZ-103X	C.CAPACITOR 50V 0.01U	1	
C1807	NCB21HK-472X	C.CAPACITOR 50V 4700P	1	
C1808	NCF21EZ-104X	C.CAPACITOR 25V 0.1U	1	
C1809	NEH71HM-105X	E.CAPACITOR 50V 1U	1	
C1810	NEH71CM-476X	E.CAPACITOR 16V 47U	1	
C1811	NCF21HZ-103X	C.CAPACITOR 50V 0.01U	1	
C1812	NCF21HZ-104X	C.CAPACITOR 50V 0.1U	1	
C1813	NEH70JM-107X	E.CAPACITOR 6.3V 100U	1	
C1814	NCF21HZ-103X	C.CAPACITOR 50V 0.01U	1	
C1815	NDC21HJ-271X	C.CAPACITOR 50V 270P	1	
C1816	NCB21HK-222X	C.CAPACITOR 50V 2200P	1	
D1103,04	MA111	DIODE	2	
D1601,02	MA111	DIODE	2	
D1605	MA111	DIODE	1	
D1606	MA3030-H	DIODE	1	
D1607-18	MA111	DIODE	12	
D1619	MA2Z720-X	SB DIODE	1	
D1620,21	MA111	DIODE	2	
D1801-06	MA3051-M	DIODE	6	
D1807	MA2Z720-X	SB DIODE	1	
D1808-18	MA3051-M	DIODE	11	
IC1101	M52346SP	IC	1	
IC1104	EPF6024ATC14	IC	1	
IC1105	EP2LC20V171C	IC (DIGITAL)	1	(SERVICE)
IC1106	TLC2932IPW	IC	1	
IC1109	BA033FP	IC	1	
IC1601	TA1276AN	IC	1	

Components identified with the mark ⚠ have special characteristics for safety.
When replacing any of these component, use only the same type.

Ref.No.	Part No.	Part Name & Description	Pcs	Remarks
IC1602	M52055FP	IC	1	C1AB00000734
IC1603	TC4053BFNXE	IC	1	
IC1604	M52055FP	IC	1	C1AB00000734
IC1605	TC4053BFNXE	IC	1	
IC1606	M52055FP	IC	1	C1AB00000734
IC1607	TC4053BFNXE	IC	1	
IC1608	BA09FP	IC	1	
IC1801	MB90F553V171	IC	1	(SERVICE)
IC1802	MN1382-Q	IC	1	
IC1803	TC4053BFNXE	IC	1	
IC1804	M35045-075SP	IC	1	
IC1805	AT24C16V171C	IC	1	(SERVICE)
K1101-03	NQR0357-002X	FERRITE BEADS	3	
Q1101	2SC2412K	TRANSISTOR	1	
Q1102	2SA1037AK/QR	TRANSISTOR	1	
Q1103-07	2SC2412K	TRANSISTOR	5	
Q1108	2SA1037AK/QR	TRANSISTOR	1	
Q1109	DTC124EKA	TRANSISTOR	1	
Q1110	2SC2412K	TRANSISTOR	1	
Q1111-13	DTC124EKA	TRANSISTOR	3	
Q1601,02	2SC2412K	TRANSISTOR	2	
Q1603	2SA1037AK/QR	TRANSISTOR	1	
Q1604,05	2SC2412K	TRANSISTOR	2	
Q1606	2SA1037AK/QR	TRANSISTOR	1	
Q1607,08	2SC2412K	TRANSISTOR	2	
Q1609	2SA1037AK/QR	TRANSISTOR	1	
Q1610,11	2SC2412K	TRANSISTOR	2	
Q1612	2SA1037AK/QR	TRANSISTOR	1	
Q1613,14	2SC2412K	TRANSISTOR	2	
Q1615	2SA1037AK/QR	TRANSISTOR	1	
Q1616,17	2SC2412K	TRANSISTOR	2	
Q1618	2SA1037AK/QR	TRANSISTOR	1	
Q1619-21	2SC2412K	TRANSISTOR	3	
Q1626	2SA1037AK/QR	TRANSISTOR	1	
Q1631,32	DTC124EKA	TRANSISTOR	2	
Q1801,02	2SC2412K	TRANSISTOR	2	
Q1803	DTC124EKA	TRANSISTOR	1	
Q1804,05	2SC2412K	TRANSISTOR	2	
R1101	NRSA02J-101X	M.RESISTOR 1/10W 100	1	
R1102	NRSA02J-0R0X	M.RESISTOR 1/10W 0	1	
R1103	NRSA02J-102X	M.RESISTOR 1/10W 1K	1	
R1104	NRSA02J-104X	M.RESISTOR 1/10W 100K	1	
R1105	NRSA02J-154X	M.RESISTOR 1/10W 150K	1	
R1106	NRSA02J-473X	M.RESISTOR 1/10W 47K	1	
R1107	NRSA02J-273X	M.RESISTOR 1/10W 27K	1	
R1108-10	NRSA02J-102X	M.RESISTOR 1/10W 1K	3	
R1111	NRSA02J-183X	M.RESISTOR 1/10W 18K	1	
R1112,13	NRSA02J-101X	M.RESISTOR 1/10W 100	2	
R1114	NRSA02J-102X	M.RESISTOR 1/10W 1K	1	
R1120	NRSA02J-104X	M.RESISTOR 1/10W 100K	1	
R1121	NRSA02J-273X	M.RESISTOR 1/10W 27K	1	
R1122	NRSA02J-182X	M.RESISTOR 1/10W 1.8K	1	
R1123	NRSA02J-122X	M.RESISTOR 1/10W 1.2K	1	
R1124	NRSA02J-272X	M.RESISTOR 1/10W 2.7K	1	
R1125	NRSA02J-182X	M.RESISTOR 1/10W 1.8K	1	
R1126	NRSA02J-272X	M.RESISTOR 1/10W 2.7K	1	
R1128	NRSA02J-334X	M.RESISTOR 1/10W 330K	1	
R1129,30	NRSA02J-102X	M.RESISTOR 1/10W 1K	2	
R1131,32	NRSA02J-101X	M.RESISTOR 1/10W 100	2	
R1135	NRSA02J-0R0X	M.RESISTOR 1/10W 0	1	
R1136	NRSA02J-103X	M.RESISTOR 1/10W 10K	1	
R1137	NRSA02J-102X	M.RESISTOR 1/10W 1K	1	
R1138	NRSA02J-103X	M.RESISTOR 1/10W 10K	1	
R1139	NRSA02J-102X	M.RESISTOR 1/10W 1K	1	
R1140-45	NRSA02J-103X	M.RESISTOR 1/10W 10K	6	
R1146-49	NRSA02J-102X	M.RESISTOR 1/10W 1K	4	
R1150	NRSA02J-103X	M.RESISTOR 1/10W 10K	1	
R1151-54	NRSA02J-102X	M.RESISTOR 1/10W 1K	4	
R1161	NRSA02J-103X	M.RESISTOR 1/10W 10K	1	
R1162,63	NRSA02J-221X	M.RESISTOR 1/10W 220	2	
R1164	NRSA02J-101X	M.RESISTOR 1/10W 100	1	
R1166	NRSA02J-102X	M.RESISTOR 1/10W 1K	1	

Ref.No.	Part No.	Part Name & Description	Pcs	Remarks
R1168	NRSA02J-391X	M.RESISTOR 1/10W 390	1	
R1170	NRSA02J-332X	M.RESISTOR 1/10W 3.3K	1	
R1175	NRSA02J-472X	M.RESISTOR 1/10W 4.7K	1	
R1176	NRSA02J-221X	M.RESISTOR 1/10W 220	1	
R1177-79	NRSA02J-102X	M.RESISTOR 1/10W 1K	3	
R1180	NRSA02J-0R0X	M.RESISTOR 1/10W 0	1	
R1181	NRSA02J-103X	M.RESISTOR 1/10W 10K	1	
R1182	NRSA02J-0R0X	M.RESISTOR 1/10W 0	1	
R1183	NRSA02J-222X	M.RESISTOR 1/10W 2.2K	1	
R1601	NRSA02J-101X	M.RESISTOR 1/10W 100	1	
R1602	NRSA02J-561X	M.RESISTOR 1/10W 560	1	
R1603,04	NRSA02J-272X	M.RESISTOR 1/10W 2.7K	2	
R1605	NRSA02J-561X	M.RESISTOR 1/10W 560	1	
R1606	NRSA02J-272X	M.RESISTOR 1/10W 2.7K	1	
R1607	NRSA02J-101X	M.RESISTOR 1/10W 100	1	
R1608	NRSA02J-272X	M.RESISTOR 1/10W 2.7K	1	
R1609	NRSA02J-101X	M.RESISTOR 1/10W 100	1	
R1610	NRSA02J-561X	M.RESISTOR 1/10W 560	1	
R1611,12	NRSA02J-272X	M.RESISTOR 1/10W 2.7K	2	
R1613	NRSA02J-561X	M.RESISTOR 1/10W 560	1	
R1614	NRSA02J-272X	M.RESISTOR 1/10W 2.7K	1	
R1615	NRSA02J-101X	M.RESISTOR 1/10W 100	1	
R1616	NRSA02J-272X	M.RESISTOR 1/10W 2.7K	1	
R1617	NRSA02J-101X	M.RESISTOR 1/10W 100	1	
R1618	NRSA02J-561X	M.RESISTOR 1/10W 560	1	
R1619,20	NRSA02J-272X	M.RESISTOR 1/10W 2.7K	2	
R1621	NRSA02J-561X	M.RESISTOR 1/10W 560	1	
R1622	NRSA02J-272X	M.RESISTOR 1/10W 2.7K	1	
R1623	NRSA02J-101X	M.RESISTOR 1/10W 100	1	
R1624	NRSA02J-272X	M.RESISTOR 1/10W 2.7K	1	
R1625	NRSA02J-102X	M.RESISTOR 1/10W 1K	1	
R1626-28	NRSA02J-563X	M.RESISTOR 1/10W 56K	3	
R1629	NRSA02J-333X	M.RESISTOR 1/10W 33K	1	
R1630	NRSA02J-272X	M.RESISTOR 1/10W 2.7K	1	
R1631	NRSA02J-391X	M.RESISTOR 1/10W 390	1	
R1632	NRSA02J-101X	M.RESISTOR 1/10W 100	1	
R1633,34	NRSA02J-0R0X	M.RESISTOR 1/10W 0	2	
R1635	NRSA02J-103X	M.RESISTOR 1/10W 10K	1	
R1636-41	NRSA02J-101X	M.RESISTOR 1/10W 100	6	
R1642	NRSA02J-332X	M.RESISTOR 1/10W 3.3K	1	
R1644-46	NRSA02J-471X	M.RESISTOR 1/10W 470	3	
R1647-49	NRSA02J-101X	M.RESISTOR 1/10W 100	3	
R1651,52	NRSA02J-562X	M.RESISTOR 1/10W 5.6K	2	
R1653-55	NRSA02J-392X	M.RESISTOR 1/10W 3.9K	3	
R1656-58	NRSA02J-271X	M.RESISTOR 1/10W 270	3	
R1659	NRSA02J-561X	M.RESISTOR 1/10W 560	1	
R1660	NRSA02J-473X	M.RESISTOR 1/10W 47K	1	
R1663	NRSA02J-0R0X	M.RESISTOR 1/10W 0	1	
R1664	NRSA02J-102X	M.RESISTOR 1/10W 1K	1	
R1671	NRSA02J-562X	M.RESISTOR 1/10W 5.6K	1	
R1672,73	NRSA02J-0R0X	M.RESISTOR 1/10W 0	2	
R1674	NRSA02J-153X	M.RESISTOR 1/10W 15K	1	
R1675,76	NRSA02J-183X	M.RESISTOR 1/10W 18K	2	
R1677	NRSA02J-0R0X	M.RESISTOR 1/10W 0	1	
R1678	NRSA02J-153X	M.RESISTOR 1/10W 15K	1	
R1679,80	NRSA02J-183X	M.RESISTOR 1/10W 18K	2	
R1681	NRSA02J-0R0X	M.RESISTOR 1/10W 0	1	
R1682	NRSA02J-153X	M.RESISTOR 1/10W 15K	1	
R1683,84	NRSA02J-183X	M.RESISTOR 1/10W 18K	2	
R1685-90	NRSA02J-561X	M.RESISTOR 1/10W 560	6	
R1693	NRSA02J-102X	M.RESISTOR 1/10W 1K	1	
R1694	NRSA02J-0R0X	M.RESISTOR 1/10W 0	1	
R1697	NRSA02J-0R0X	M.RESISTOR 1/10W 0	1	
R1701	NRSA02J-0R0X	M.RESISTOR 1/10W 0	1	
R1815-20	NRSA02J-101X	M.RESISTOR 1/10W 100	6	
R1825-28	NRSA02J-472X	M.RESISTOR 1/10W 4.7K	4	
R1829	NRSA02J-101X	M.RESISTOR 1/10W 100	1	
R1833-36	NRSA02J-101X	M.RESISTOR 1/10W 100	4	
R1846,47	NRSA02J-101X	M.RESISTOR 1/10W 100	2	
R1848	NRSA02J-103X	M.RESISTOR 1/10W 10K	1	
R1850-56	NRSA02J-103X	M.RESISTOR 1/10W 10K	7	
R1859	NRSA02J-101X	M.RESISTOR 1/10W 100	1	
R1860	NRSA02J-103X	M.RESISTOR 1/10W 10K	1	
R1861	NRSA02J-101X	M.RESISTOR 1/10W 100	1	
R1869	NRSA02J-103X	M.RESISTOR 1/10W 10K	1	

Components identified with the mark ⚠ have special characteristics for safety.
When replacing any of these component, use only the same type.

Ref.No.	Part No.	Part Name & Description	Pcs	Remarks
R1875-77	NRSA02J-103X	M.RESISTOR 1/10W 10K	3	
R1882	NRSA02J-101X	M.RESISTOR 1/10W 100	1	
R1890	NRSA02J-102X	M.RESISTOR 1/10W 1K	1	
R1891-93	NRSA02J-101X	M.RESISTOR 1/10W 100	3	
R1897,98	NRSA02J-472X	M.RESISTOR 1/10W 4.7K	2	
R1901-07	NRSA02J-101X	M.RESISTOR 1/10W 100	7	
R1911	NRSA02J-472X	M.RESISTOR 1/10W 4.7K	1	
R1912	NRSA02J-272X	M.RESISTOR 1/10W 2.7K	1	
R1913	NRSA02J-223X	M.RESISTOR 1/10W 22K	1	
R1914-16	NRSA02J-473X	M.RESISTOR 1/10W 47K	3	
R1917,18	NRSA02J-101X	M.RESISTOR 1/10W 100	2	
R1919-22	NRSA02J-472X	M.RESISTOR 1/10W 4.7K	4	
R1923	NRSA02J-104X	M.RESISTOR 1/10W 100K	1	
R1924	NRSA02J-272X	M.RESISTOR 1/10W 2.7K	1	
R1925	NRSA02J-223X	M.RESISTOR 1/10W 22K	1	
R1926	NRSA02J-222X	M.RESISTOR 1/10W 2.2K	1	
R1927	NRSA02J-0R0X	M.RESISTOR 1/10W 0	1	
RA1131	NRZ0040-103X	COMBI.R-R 10K	1	
RA1135,36	NRZ0040-101X	COMBI.R-R 100	2	
RA1801,02	NRZ0040-101X	COMBI.R-R 100	2	
RA1803-05	NRZ0040-103X	COMBI.R-R 10K	3	
RA1806-09	NRZ0040-101X	COMBI.R-R 100	4	
RA1810	NRZ0040-103X	COMBI.R-R 10K	1	
RA1811-14	NRZ0040-101X	COMBI.R-R 100	4	
X1601	CE40749-001Z	CRYSTAL OSCILLATOR	1	
X1602	CE40668-001Z	CRYSTAL OSCILLATOR	1	
X1603	CSB503F30	CRYSTAL OSCILLATOR	1	
X1801	CST4.00MGW	CERAMIC RESONAT	1	
■	FX-2093A	MAIN P.C.BOARD	1	(RTL)
C2401	QFLC1HJ-104Z	P.CAPACITOR 50V 100U	1	
C2402	QFV71HJ-334Z	P.CAPACITOR 50V 0.33U	1	
C2403	QCS31HJ-121Z	C.CAPACITOR 50V 120P	1	
C2404	QTMN1VM-107Z	E.CAPACITOR 35V 100U	1	
C2405	QCB32HK-151Z	C.CAPACITOR 500V 150P	1	
C2406	QFLC1HJ-563Z	P.CAPACITOR 50V 0.056U	1	
C2408	QFV71HJ-154Z	P.CAPACITOR 50V 0.15U	1	
C2409,20	QEHQ1EM-228	E.CAPACITOR 25V 2200U	2	
C2501	QEZ0368-227	E.CAPACITOR 200V 220U	1	
C2502	QFLC2AK-224Z	P.CAPACITOR 50V 0.22U	1	
C2503	QCB32HK-151Z	C.CAPACITOR 500V 150P	1	
C2504	QEZ0097-106R	E.CAPACITOR 160V 10U	1	
C2506	QCB32HK-472Z	C.CAPACITOR 500V 4700P	1	
C2507	QFLC1HJ-222Z	P.CAPACITOR 50V 2200P	1	
C2508,09	QTMN1CM-107Z	E.CAPACITOR 16V 100U	2	
C2510	QFV71HJ-474Z	P.CAPACITOR 50V 0.47U	1	
C2511	QFLC1HJ-122Z	P.CAPACITOR 50V 1200P	1	
C2512	QTMN1EM-227Z	E.CAPACITOR 25V 220U	1	
C2513,14	QFLC1HJ-472Z	P.CAPACITOR 50V 4700P	2	
C2515	QFLC1HJ-392Z	P.CAPACITOR 50V 3900P	1	
C2516	QFLC2AK-224Z	P.CAPACITOR 50V 0.22U	1	
C2517	QEHR1HM-105Z	E.CAPACITOR 50V 1U	1	
C2518	QEHR1HM-476Z	E.CAPACITOR 50V 47U	1	
C2520	QFZ0196-202	P.CAPACITOR 2000P	1	
⚠ C2521	QFZ0196-302	P.CAPACITOR 3000P	1	
C2522	QFLC1HJ-823Z	P.CAPACITOR 50V 0.082U	1	
⚠ C2523	QFZ0196-302	P.CAPACITOR 3000P	1	
C2526	QCS31HJ-471Z	C.CAPACITOR 50V 470P	1	
C2527	QFLC1HJ-472Z	P.CAPACITOR 50V 4700P	1	
C2528	QEHR1CM-107Z	E.CAPACITOR 16V 100U	1	
C2550	QEHR1HM-475Z	E.CAPACITOR 50V 4.7U	1	
C2551	QFV71HJ-274Z	P.CAPACITOR 50V 0.27U	1	
C2552	QFZ0196-102	P.CAPACITOR 1000P	1	
C2553	QFV71HJ-274Z	P.CAPACITOR 50V 0.27U	1	
C2554	QEHQ2AM-227	E.CAPACITOR 100V 220U	1	
C2555	QFK62AK-334Z	P.CAPACITOR 100V 0.33U	1	
C2557	QEHR1EM-337Z	E.CAPACITOR 25V 330U	1	

Ref.No.	Part No.	Part Name & Description	Pcs	Remarks
C2558	QTNC1HM-105Z	E.CAPACITOR 50V 1M	1	
C2559,60	QEHR1HM-105Z	E.CAPACITOR 50V 1U	2	
C2562	QEHR2CM-336Z	E.CAPACITOR 160V 33U	1	
C2570	QEHR1HM-105Z	E.CAPACITOR 50V 1U	1	
C2571	QEHR1HM-106Z	E.CAPACITOR 50V 10U	1	
C2601	QTNC1HM-225Z	E.CAPACITOR 50V 2.2U	1	
C2602	QEHR1HM-106Z	E.CAPACITOR 50V 10U	1	
C2603	QCS31HJ-150Z	C.CAPACITOR 50V 15P	1	
C2604	QEHR2CM-336Z	E.CAPACITOR 160V 33U	1	
C2605	QTNC1HM-106Z	E.CAPACITOR 50V 10U	1	
C2606	QFLC1HJ-472Z	P.CAPACITOR 50V 4700P	1	
C2607	QTNC1HM-225Z	E.CAPACITOR 50V 2.2U	1	
C2608	QCS32HJ-271Z	C.CAPACITOR 500V 270P	1	
C2609	QEHR1HM-106Z	E.CAPACITOR 50V 10U	1	
C2610	QCB32HK-391Z	C.CAPACITOR 500V 390P	1	
C2620	QTMN1HM-336Z	E.CAPACITOR 50V 33U	1	
C2621	QFLC1HJ-563Z	P.CAPACITOR 50V 0.056U	1	
C2801	QEHQ1EM-228	E.CAPACITOR 25V 2200U	1	
C2802	QTNC1HM-105Z	E.CAPACITOR 50V 1M	1	
C2803	QFLC1HJ-332Z	P.CAPACITOR 50V 3300P	1	
C2804	QEHR1HM-225Z	E.CAPACITOR 50V 2.2U	1	
C2805	QEHR1HM-106Z	E.CAPACITOR 50V 10U	1	
C2806	QEHR1HM-475Z	E.CAPACITOR 50V 4.7U	1	
C2807,08	QEHR1HM-336Z	E.CAPACITOR 50V 33U	2	
C2809	QEHQ1EM-228	E.CAPACITOR 25V 2200U	1	
C2810,11	QFV71HJ-104Z	P.CAPACITOR 50V 0.1U	2	
C2812,13	QEHQ1EM-228	E.CAPACITOR 25V 2200U	2	
C2814	QEHR1CM-227Z	E.CAPACITOR 16V 110U	1	
⚠ C2901	QFZ9036-104	P.CAPACITOR 250V 0.1U	1	
⚠ C2902-05	QCZ9078-472	C.CAPACITOR 250V 4700P	4	
⚠ C2906	QEHQ2GM-226	E.CAPACITOR 40V 2.2U	1	
C2908	QEZ0587-567	E.CAPACITOR 400V 560U	1	
C2909	QCB32HK-472Z	C.CAPACITOR 500V 4700P	1	
C2910	QTMN1EM-107Z	E.CAPACITOR 25V 100U	1	
C2911	QCS31HJ-471Z	C.CAPACITOR 50V 470P	1	
⚠ C2912,13	QCZ9075-472	C.CAPACITOR 4700P	2	
⚠ C2914	QFZ9036-224	C.CAPACITOR 0.22U	1	
C2915	QCZ0122-681	C.CAPACITOR 2KV 680P	1	
C2916-19	QCB32HK-271Z	C.CAPACITOR 500V 270P	4	
C2920	QTMN1EM-337Z	E.CAPACITOR 25V 330U	1	
C2921	QTMN1CM-107Z	E.CAPACITOR 16V 100U	1	
C2922	QTMN1EM-337Z	E.CAPACITOR 25V 330U	1	
C2923	QEZ0368-227	E.CAPACITOR 200V 220U	1	
C2924	QEHR1HM-106Z	E.CAPACITOR 50V 10U	1	
C2925	QEZ0368-227	E.CAPACITOR 200V 220U	1	
C2926	QEHQ1EM-228	E.CAPACITOR 25V 2200U	1	
C2927	QTMM1EM-228	E.CAPACITOR 25V 2200U	1	
C2928	QEHR1HM-106Z	E.CAPACITOR 50V 10U	1	
C2929	QFV71HJ-224Z	P.CAPACITOR 50V 0.22U	1	
C2930	QEHR1HM-106Z	E.CAPACITOR 50V 10U	1	
C2931	QEZ0256-228	E.CAPACITOR 10V 2200U	1	
C2932	QTMN1CM-107Z	E.CAPACITOR 16V 100U	1	
C2933	QEZ0256-128	E.CAPACITOR 10V 1200U	1	
C2934	QTMN1CM-107Z	E.CAPACITOR 16V 100U	1	
C2935	QEHR1EM-477Z	E.CAPACITOR 25V 470U	1	
C2936	QEHQ1EM-228	E.CAPACITOR 25V 2200U	1	
C2937	QEHR1HM-106Z	E.CAPACITOR 50V 10U	1	
C2939	QTMN1CM-107Z	E.CAPACITOR 16V 100U	1	
C2940	QFLC1HJ-103Z	P.CAPACITOR 50V 0.01U	1	
C2941	QFLC1HJ-102Z	P.CAPACITOR 50V 1000P	1	
C2942	QTNC1HM-106Z	E.CAPACITOR 50V 10U	1	
C2943	QFLC1HJ-102Z	P.CAPACITOR 50V 1000P	1	
C2944	QTMN1EM-477Z	E.CAPACITOR 25V 470U	1	
⚠ C2945,46	QCZ9078-472	C.CAPACITOR 250V 4700P	2	
C2947	QFVF1HJ-824Z	P.CAPACITOR 50V 0.82U	1	
C2950	QEHR1CM-107Z	E.CAPACITOR 16V 100U	1	
C2952	QEHR1EM-108Z	E.CAPACITOR 25V 1000U	1	
C2953	QFLC1HJ-103Z	P.CAPACITOR 50V 0.01U	1	
C2954	QEHR1CM-227Z	E.CAPACITOR 16V 110U	1	
C2955	QEHR2CM-335Z	E.CAPACITOR 160V 3.3U	1	
C2958	QTMN1EM-107Z	E.CAPACITOR 25V 100U	1	
⚠ CP2901	QMFZ034-100Z	FUSE	1	
⚠ CP2904	ICP-N75-Y	IC PROTECTOR	1	2.7A

Components identified with the mark ⚠ have special characteristics for safety.
When replacing any of these component, use only the same type.

Ref.No.	Part No.	Part Name & Description	Pcs	Remarks
D2402,03	RD33EB2	DIODE	2	
D2404	1SR35-400A	SI DIODE	1	
D2412	1SS133	DIODE	1	
D2501	1SS244	DIODE	1	
D2502,03	MTZJ12C	DIODE	2	
D2504	RL4Z	DIODE	1	
D2505-07	1SS133	DIODE	3	
⚠ D2508	RGP10J5025	DIODE	1	
D2509,10	MTZJ5.6B	DIODE	2	
D2511	1SS133	DIODE	1	
D2512	AG01Z	DIODE	1	
D2513	1SS244	DIODE	1	
D2514	AG01Z	DIODE	1	
D2515	MTZJ5.1B	DIODE	1	
D2516	1SS133	DIODE	1	
D2517	RK14	DIODE	1	
D2520	RU4DSF1	DIODE	1	
D2521	CTU-G3DR	DIODE	1	
D2522	RG2A2LFC4	DIODE	1	
D2523	1SS244	DIODE	1	
D2524,25	RG1C-LFA1	DIODE	2	
D2550,51	1SR35-400A	SI DIODE	2	
⚠ D2552	RGP10J5025	DIODE	1	
⚠ D2555	RGP10J5025	DIODE	1	
D2602	MTZJ5.1B	DIODE	1	
D2603	MTZJ27B	DIODE	1	
D2801	MTZJ11A	DIODE	1	
D2802	1SS133	DIODE	1	
⚠ D2901	RBV-406	DIODE	1	
D2902	RU2LFA1	DIODE	1	
D2903,04	AG01Z	DIODE	2	
D2908	RM2CLFA1	DIODE	1	
D2909	AG01	DIODE	1	
D2910	SF6L20U	DIODE	1	
D2911,12	RG2ALFC4	DIODE	2	
D2913	RU3YXLFC4	DIODE	1	
D2914,15	1SS133	DIODE	2	
D2916,17	MTZJ3.3A	DIODE	2	
D2918	1SS133	DIODE	1	
D2919,20	MTZJ12C	DIODE	2	
D2921-23	1SS133	DIODE	3	
D2925	S1WBA80-4101	BRIDGE DIODE	1	
D2950	RK44LFT4	DIODE	1	
D2951	MTZJ5.6B	DIODE	1	
D2952	1SS133	DIODE	1	
⚠ F2901	QMF51D2-6R3J	FUSE	1	
IC2401	AN5539-LF	IC	1	
IC2510	JLC1562BN	IC	1	
IC2601	UPC4556C	IC	1	C0AABB000012
IC2801	AN5265	IC	1	
⚠ IC2901	STR-F6658BF7	IC	1	
⚠ IC2902	QAL0256-001	IC	1	
IC2903	SE140N	IC	1	
IC2904	TA79012S	IC	1	
IC2905	BA12T	IC	1	
IC2906	BA05T	IC	1	
IC2907	SI8050S	IC	1	
IC2911	PQ30RV21	IC	1	
K2501	QQR0872-002	FERRITE BEADS	1	
K2502	QQR0872-001Y	FERRITE BEADS	1	
L2501	QQLZ020-801	COIL 800UH	1	
L2502,03	QQR0666-003	LINEARITY COIL	2	
L2504	QQLZ020-801	COIL 800UH	1	
L2505	QQL26AK-821Z	COIL 820UH	1	
L2551	QQLZ018-380	COIL 38UH	1	
L2553	QQL50AK-221Z	COIL 220UH	1	
L2801	QQL244K-4R7Z	COIL 4.7UH	1	
⚠ L2901	QQR0676-004	LINE FILTER	1	
⚠ L2902	QQR0646-006	COIL	1	
L2904	QQL244K-100Z	COIL 10UH	1	
L2910	QQR0518-001	COIL	1	

Ref.No.	Part No.	Part Name & Description	Pcs	Remarks
L2911	QQL50AK-100Z	COIL 10UH	1	
⚠ PC2901	TLP721FD4-GR	PHOTO COUPLER	1	
⚠ PC2902	TLP759F/D4/	IC	1	
Q2401	2SC3311A	TRANSISTOR	1	2SC3311AW
Q2501	IRF9630	FET	1	
Q2502	2SC5570	TRANSISTOR	1	
Q2503	2SC3311A	TRANSISTOR	1	2SC3311AW
Q2504	2SA1309A-R	TRANSISTOR	1	
Q2505	2SC3311A	TRANSISTOR	1	2SC3311AW
Q2506	2SB946/P/	TRANSISTOR	1	
Q2507	IRFZ14	FET	1	
Q2508	2SC3311A	TRANSISTOR	1	2SC3311AW
Q2511	2SC3311A	TRANSISTOR	1	2SC3311AW
Q2512	DTC114ESA	TRANSISTOR	1	
Q2513	2SA1370/E/	TRANSISTOR	1	
Q2514	DTC124ESA	TRANSISTOR	1	
Q2550	2SK2459N-F54	FET	1	
Q2551	2SK2477	FET	1	
Q2601	2SC3311A	TRANSISTOR	1	2SC3311AW
Q2602	2SD1271A-P	TRANSISTOR	1	
Q2603	2SB861/C/	TRANSISTOR	1	2SB861W/C/
Q2604	2SC1505/MLK/	TRANSISTOR	1	
Q2605	2SK2043-CB14	TRANSISTOR	1	
Q2901,02	2SA1309A-R	TRANSISTOR	2	
Q2903,04	2SA1370/E/	TRANSISTOR	2	
Q2905	2SC3311A	TRANSISTOR	1	2SC3311AW
Q2906	2SA1309A-R	TRANSISTOR	1	
Q2910	2SC3311A	TRANSISTOR	1	2SC3311AW
Q2911	2SC2229/Y/	TRANSISTOR	1	
R2401	QRE141J-122Y	C.RESISTOR 1/4W 1.2K	1	
R2402,03	QRA14CF-2611	M.RESISTOR 1/4W 2.61K	2	
R2404	QRA14CF-2491	M.RESISTOR 1/4W 2.49K	1	
R2405	QRA14CF-3091	M.RESISTOR 1/4W 3.09K	1	
R2406	QRE141J-221Y	C.RESISTOR 1/4W 220	1	
R2407	QRE141J-0R0Y	M.RESISTOR 1/4W 0	1	
R2408	QRA14CF-3900	C.RESISTOR 1/4W 390	1	
R2409	QRE141J-103Y	C.RESISTOR 1/4W 10K	1	
R2410	QRX029J-1R5	M.RESISTOR 2W 1.5	1	
R2411	QRE121J-8R2Y	C.RESISTOR 1/2W 8.2	1	
R2412	QRE141J-102Y	C.RESISTOR 1/4W 1K	1	
R2413	QRE141J-101Y	C.RESISTOR 1/4W 100	1	
R2414	QRE141J-331Y	C.RESISTOR 1/4W 330	1	
R2419	QRG01GJ-331	M.RESISTOR 1W 330	1	
R2422	QRE141J-152Y	C.RESISTOR 1/4W 1.5K	1	
R2430	QRE141J-103Y	C.RESISTOR 1/4W 10K	1	
R2501	QRE141J-184Y	C.RESISTOR 1/4W 180K	1	
R2502	QRE141J-122Y	C.RESISTOR 1/4W 1.2K	1	
R2503	QRE141J-224Y	C.RESISTOR 1/4W 220	1	
R2504	QRA14CF-3302	M.RESISTOR 1/4W 33K	1	
⚠ R2505	QRA14CF-2202	M.RESISTOR 1/4W 22K	1	
⚠ R2508	QRA14CF-5601	M.RESISTOR 1/4W 5.6K	1	
R2509	QRE141J-103Y	C.RESISTOR 1/4W 10K	1	
R2510	QRE141J-223Y	C.RESISTOR 1/4W 22K	1	
R2511	QRE141J-103Y	C.RESISTOR 1/4W 10K	1	
R2512	QRE141J-101Y	C.RESISTOR 1/4W 100	1	
R2513	QRE141J-100Y	C.RESISTOR 1/4W 10	1	
R2514	QRE141J-473Y	C.RESISTOR 1/4W 47K	1	
R2515	QRE141J-222Y	C.RESISTOR 1/4W 2.2K	1	
R2516	QRG01GJ-470	M.RESISTOR 1W 47	1	
R2517	QRE141J-102Y	C.RESISTOR 1/4W 1K	1	
R2518	QRX01GJ-R68	M.RESISTOR 1/4W 0.68	1	
R2519	QRX039J-1R0	M.RESISTOR 3W 1	1	
R2520	QRG039J-100	M.RESISTOR 3W 10	1	
R2521	QRE121J-101Y	C.RESISTOR 1/2W 100	1	
R2522,23	QRE141J-470Y	C.RESISTOR 1/4W 47	2	
R2524	QRX029J-1R8	M.RESISTOR 2W 1.8	1	
R2525	QRE121J-124Y	C.RESISTOR 1/2W 120K	1	
R2526	QRE141J-153Y	C.RESISTOR 1/4W 15K	1	
R2527	QRE141J-102Y	C.RESISTOR 1/4W 1K	1	
R2528	QRE141J-103Y	C.RESISTOR 1/4W 10K	1	
R2529	QRE141J-0R0Y	M.RESISTOR 1/4W 0	1	
R2530	QRE121J-121Y	C.RESISTOR 1/2W 120	1	

Components identified with the mark ⚠ have special characteristics for safety.
When replacing any of these component, use only the same type.

Ref.No.	Part No.	Part Name & Description	Pcs	Remarks
R2531	QRE121J-471Y	C.RESISTOR 1/2W 470	1	
R2532,33	QRE141J-103Y	C.RESISTOR 1/4W 10K	2	
R2534	QRL029J-101	M.RESISTOR 1W 100	1	
R2535	QRE141J-152Y	C.RESISTOR 1/4W 1.5K	1	
R2536-38	QRE141J-153Y	C.RESISTOR 1/4W 15K	3	
R2539	QRE141J-471Y	C.RESISTOR 1/4W 470	1	
R2540,41	QRE141J-472Y	C.RESISTOR 1/4W 4.7K	2	
R2543-49	QRE141J-472Y	C.RESISTOR 1/4W 4.7K	7	
R2550	QRM059J-R15	M.RESISTOR 5W 0.15	1	
R2551	QRE121J-152Y	C.RESISTOR 1/2W 1.5K	1	
⚠ R2552	QRA14CF-2203	M.RESISTOR 1/4W 220K	1	
R2553	QRG029J-330	M.RESISTOR 2W 33	1	
R2555	QRE141J-393Y	C.RESISTOR 1/4W 39	1	
⚠ R2556	QRZ9017-2R2	F.RESISTOR 1/4W 2.2	1	
R2557	QRE121J-330Y	C.RESISTOR 1/2W 33	1	
R2558,59	QRE141J-102Y	C.RESISTOR 1/4W 1K	2	
R2561	QRE141J-103Y	C.RESISTOR 1/4W 10K	1	
R2562	QRE141J-332Y	C.RESISTOR 1/4W 3.3K	1	
R2563	QRE141J-272Y	C.RESISTOR 1/4W 2.7K	1	
R2564	QRE141J-103Y	C.RESISTOR 1/4W 10K	1	
R2566	QRE121J-471Y	C.RESISTOR 1/2W 470	1	
R2601	QRE141J-682Y	C.RESISTOR 1/4W 6.8K	1	
R2602	QRE141J-123Y	C.RESISTOR 1/4W 12K	1	
R2603	QRE141J-273Y	C.RESISTOR 1/4W 27K	1	
R2604	QRE141J-153Y	C.RESISTOR 1/4W 15K	1	
R2605	QRE121J-332Y	C.RESISTOR 1/2W 3.3K	1	
R2606,07	QRE141J-104Y	C.RESISTOR 1/4W 100K	2	
R2608	QRE141J-153Y	C.RESISTOR 1/4W 15K	1	
R2609	QRE141J-823Y	C.RESISTOR 1/4W 82K	1	
R2610	QRE141J-100Y	C.RESISTOR 1/4W 10	1	
R2611,12	QRE141J-104Y	C.RESISTOR 1/4W 100K	2	
R2613	QRE141J-821Y	C.RESISTOR 1/4W 820	1	
R2615	QRE141J-102Y	C.RESISTOR 1/4W 1K	1	
R2616	QRE141J-103Y	C.RESISTOR 1/4W 10K	1	
R2620	QRE121J-2R2Y	C.RESISTOR 1/2W 2.2K	1	
R2621	QRE141J-474Y	C.RESISTOR 1/4W 470K	1	
R2622	QRE141J-332Y	C.RESISTOR 1/4W 3.3K	1	
R2623	QRE121J-683Y	C.RESISTOR 1/2W 68K	1	
R2624	QRE141J-271Y	C.RESISTOR 1/4W 270	1	
R2801	QRE121J-181Y	C.RESISTOR 1/2W 180K	1	
R2802	QRE141J-562Y	C.RESISTOR 1/4W 5.6	1	
R2803	QRE141J-102Y	C.RESISTOR 1/4W 1K	1	
R2804	QRE141J-103Y	C.RESISTOR 1/4W 10K	1	
R2805	QRE141J-102Y	C.RESISTOR 1/4W 1K	1	
R2807	QRE141J-221Y	C.RESISTOR 1/4W 220	1	
R2808	QRE141J-223Y	C.RESISTOR 1/4W 22K	1	
R2809	QRE141J-100Y	C.RESISTOR 1/4W 10	1	
⚠ R2810	QRZ9021-8R2	F.RESISTOR 1W 8.2	1	
R2901	QRG039J-683	M.RESISTOR 3W 68	1	
R2902,03	QRM059J-R15	M.RESISTOR 5W 0.15	2	
⚠ R2904	QRK126J-681X	C.RESISTOR 1/4W 680	1	
R2905	QRE141J-332Y	C.RESISTOR 1/4W 3.3K	1	
R2906	QRE141J-472Y	C.RESISTOR 1/4W 4.7K	1	
R2907	QRE141J-332Y	C.RESISTOR 1/4W 3.3K	1	
R2910	QRL029J-683	M.RESISTOR 2W 68K	1	
R2911	QRE121J-220Y	C.RESISTOR 1/2W 22	1	
R2920	QRE141J-3R3Y	C.RESISTOR 1/4W 3.3	1	
R2921	QRE141J-103Y	C.RESISTOR 1/4W 10K	1	
R2922	QRE141J-392Y	C.RESISTOR 1/4W 3.9K	1	
R2923	QRE141J-102Y	C.RESISTOR 1/4W 1K	1	
R2924	QRE141J-122Y	C.RESISTOR 1/4W 1.2K	1	
R2925,26	QRE141J-5R6Y	C.RESISTOR 1/4W 5.6	2	
R2927	QRE141J-120Y	C.RESISTOR 1/4W 12	1	
R2929,30	QRE141J-1R5Y	C.RESISTOR 1/4W 1.5	2	
R2931	QRE141J-683Y	C.RESISTOR 1/4W 68K	1	
R2932,33	QRE141J-103Y	C.RESISTOR 1/4W 10K	2	
R2934	QRE141J-683Y	C.RESISTOR 1/4W 68K	1	
R2935	QRE141J-223Y	C.RESISTOR 1/4W 22K	1	
R2936,37	QRE141J-103Y	C.RESISTOR 1/4W 10K	2	
R2938	QRE141J-222Y	C.RESISTOR 1/4W 2.2K	1	
R2939	QRE141J-152Y	C.RESISTOR 1/4W 1.5K	1	
R2940	QRE141J-1R5Y	C.RESISTOR 1/4W 1.5	1	
⚠ R2941	QRA14CF-1501	C.RESISTOR 1/4W 1.5K	1	
⚠ R2942	QRA14CF-3900	C.RESISTOR 1/4W 390	1	
R2943	QRE141J-470Y	C.RESISTOR 1/4W 47	1	

Ref.No.	Part No.	Part Name & Description	Pcs	Remarks
R2944	QRE141J-102Y	C.RESISTOR 1/4W 1K	1	
R2945	QRE141J-222Y	C.RESISTOR 1/4W 2.2K	1	
R2946	QRE141J-1R5Y	C.RESISTOR 1/4W 1.5	1	
R2947	QRE141J-3R3Y	C.RESISTOR 1/4W 3.3	1	
R2948	QRE141J-102Y	C.RESISTOR 1/4W 1K	1	
R2949	QRE121J-152Y	C.RESISTOR 1/2W 1.5K	1	
R2970	QRE141J-821Y	C.RESISTOR 1/4W 820	1	
R2971	QRE141J-472Y	C.RESISTOR 1/4W 4.7K	1	
R2972	QRE141J-153Y	C.RESISTOR 1/4W 15K	1	
R2973	QRE141J-103Y	C.RESISTOR 1/4W 10K	1	
R2974	QRE141J-473Y	C.RESISTOR 1/4W 47K	1	
R2975	QRL039J-562	M.RESISTOR 3W 5.6K	1	
R2976-79	QRE121J-271Y	C.RESISTOR 1/2W 270	4	
⚠ RY2901,02	QSK0119-001	RELAY	2	
SG2501	CE42447-242	ARRESTOR	1	
T2501	QQR0663-001	DRIVE TRANSFORMER	1	
⚠ T2502	QQS0153-001	TRANSFORMER	1	
T2601	CE42710-001	TRANSFORMER	1	
⚠ T2901	QQS0091-001	TRANSFORMER	1	
⚠ TH2901	QAD0137-4R5	THERMISTOR 4.5	1	
TP2001,02	CM42818-001	TEST POINT	2	
⚠ Z2901	ERZV10V621CS	ZNR	1	
		MISCELLANEOUS		
	CE41667-003	RADIATION SHEET	1	
	CEMG002-001Z	FUSE CLIP	2	
■	FX-2120A	S.CORRECTION P.C.BOARD	1	(RTL)
C2501	QFZ0197-335	P.CAPACITOR 3.3U	1	
C2502	QFZ0197-105	P.CAPACITOR 1.5KV 1UF	1	
C2504	QFZ0197-824	P.CAPACITOR 0.82U	1	
C2505	QFZ0197-754	P.CAPACITOR 0.75U	1	
C2506,07	QFLC1HJ-473Z	P.CAPACITOR 50V 0.047U	2	
C2508	QFLC1HJ-153Z	P.CAPACITOR 50V 0.015U	1	
C2511,12	QEHR1CM-107Z	E.CAPACITOR 16V 100U	2	
C2513,14	QTNC1CM-476Z	E.CAPACITOR 16V 47U	2	
C2515	QFLC1HJ-104Z	P.CAPACITOR 50V 100U	1	
C2516,17	QTNC1CM-476Z	E.CAPACITOR 16V 47U	2	
C2518,19	QFLC1HJ-104Z	P.CAPACITOR 50V 100U	2	
D2501	1SS133	DIODE	1	
D2502	1SS244	DIODE	1	
D2503	RG2A2LFC4	DIODE	1	
D2520-25	1SS133	DIODE	6	
IC2501	LA6515	IC	1	
IC2502	BA15218N	IC	1	
L2501	QQR0666-001	LINEARITY COIL	1	
L2502	QQR0664-002	COIL	1	
Q2501-04	IRF640	FET	4	
Q2507-09	2SC3311A	TRANSISTOR	3	2SC3311AW
Q2511,12	2SC3311A	TRANSISTOR	2	2SC3311AW
Q2515,16	IRF640	FET	2	
R2501-03	QRE141J-102Y	C.RESISTOR 1/4W 1K	3	
R2504	QRE141J-473Y	C.RESISTOR 1/4W 47K	1	
⚠ R2505	QRA14CF-9312	M.RESISTOR 1/4W 93.1K	1	
R2506-08	QRE141J-272Y	C.RESISTOR 1/4W 2.7K	3	
R2510	QRE141J-272Y	C.RESISTOR 1/4W 2.7K	1	
R2511	QRE141J-183Y	C.RESISTOR 1/4W 18	1	

Components identified with the mark ⚠ have special characteristics for safety.
When replacing any of these component, use only the same type.

Ref.No.	Part No.	Part Name & Description	Pcs	Remarks
R2512	QRZ0121-561	M.RESISTOR 1/2W 560	1	
⚠ R2513	QRA14CF-2202	M.RESISTOR 1/4W 22K	1	
R2514	QRL029J-101	M.RESISTOR 1W 100	1	
R2515	QRL029J-470	M.RESISTOR 2W 47	1	
R2516	QRE141J-472Y	C.RESISTOR 1/4W 4.7K	1	
R2517	QRE141J-473Y	C.RESISTOR 1/4W 47K	1	
R2518	QRE141J-273Y	C.RESISTOR 1/4W 27K	1	
R2519	QRE141J-102Y	C.RESISTOR 1/4W 1K	1	
R2520	QRE141J-182Y	C.RESISTOR 1/4W 1.8K	1	
R2521	QRE141J-682Y	C.RESISTOR 1/4W 6.8K	1	
R2524	QRG01GJ-560	M.RESISTOR 1W 56	1	
R2525	QRE141J-681Y	C.RESISTOR 1/4W 680	1	
R2526-29	QRE141J-821Y	C.RESISTOR 1/4W 820	4	
R2530,31	QRG01GJ-391	M.RESISTOR 1W 390	2	
⚠ RY2501	CESK028-001	RELAY	1	
S2501	QSL4A13-C03Z	LEVER SWITCH	1	H.CENT
TP-G	CM42818-001	TEST POINT	1	
TP-XR	CM42818-001	TEST POINT	1	
VR2501	QVP0086-502Z	V.RESISTOR 5K	1	X.RAY
VR2502	QVP0086-503Z	V.RESISTOR 50K	1	H.VOLTAGE
VR2504,05	QVP0086-103Z	V.RESISTOR 10K	2	CONV_L
■	FX-3074A	CRT SOCKET P.C.BOARD	1	(RTL)
C3001	QEHQ1EM-228	E.CAPACITOR 25V 2200U	1	
C3002	NCB21HK-103X	C.CAPACITOR 50V 0.01U	1	
C3003	QEZ0368-227	E.CAPACITOR 200V 220U	1	
C3004	NDC21HJ-471X	C.CAPACITOR 50V 470P	1	
C3005	QFP32GK-563	P.CAPACITOR 400V 0.056U	1	
C3006	NCB21HK-103X	C.CAPACITOR 50V 0.01U	1	
C3007	QFM72DJ-152Z	M.CAPACITOR 200V 1500P	1	
C3008	QCZ0324-102	C.CAPACITOR 3KV 1000P	1	
C3009	QEHR1CM-107Z	E.CAPACITOR 16V 100U	1	
C3010	QEHQ2EM-336	E.CAPACITOR 250V 33U	1	
C3011	QEZ0368-227	E.CAPACITOR 200V 220U	1	
C3012	QEHR1CM-107Z	E.CAPACITOR 16V 100U	1	
C3013	QFV71HJ-154Z	P.CAPACITOR 50V 0.15U	1	
C3101	NDC21HJ-391X	C.CAPACITOR 50V 390P	1	
C3102	NDC21HJ-820X	C.CAPACITOR 50V 82P	1	
C3103	NCB21HK-103X	C.CAPACITOR 50V 0.01U	1	
C3201	NDC21HJ-331X	C.CAPACITOR 50V 330P	1	
C3202	NDC21HJ-101X	C.CAPACITOR 50V 100P	1	
C3203	NCB21HK-103X	C.CAPACITOR 50V 0.01U	1	
C3301	NDC21HJ-391X	C.CAPACITOR 50V 390P	1	
C3302	NDC21HJ-151X	C.CAPACITOR 50V 150P	1	
C3303	NCB21HK-103X	C.CAPACITOR 50V 0.01U	1	
D3001,02	MA111	DIODE	2	
D3003	1SS82	DIODE	1	
D3004,05	1SR124-400A	DIODE	2	
D3006	MA111	DIODE	1	
D3007	MA3051-M	DIODE	1	
D3008	RU2	DIODE	1	B0HAMR000050
D3009	1SS82	DIODE	1	
D3010,11	MA111	DIODE	2	
D3013	MA111	DIODE	1	
D3014	MA3110-M	DIODE	1	
D3015-17	MA111	DIODE	3	
D3018	MA3024-X	Z DIODE	1	
D3101-07	MA111	DIODE	7	
D3201-07	MA111	DIODE	7	
D3301-07	MA111	DIODE	7	
L3001	QQL01BK-102Z	COIL 1000UH	1	
L3002	QQL50AK-330Z	COIL 33UH	1	
L3102	QQL01BK-2R2Z	COIL 2.2UH	1	

Ref.No.	Part No.	Part Name & Description	Pcs	Remarks
L3202	QQL01BK-1R8Z	COIL 1.8UH	1	
L3302	QQL01BK-2R2Z	COIL 2.2UH	1	
Q3001	2SC1505/MLK/	TRANSISTOR	1	
Q3002	2SA965/0Y/	TRANSISTOR	1	
Q3003	2SC2235/0Y/	TRANSISTOR	1	
Q3004	2SC2229/Y/	TRANSISTOR	1	
Q3007	2SC2412K	TRANSISTOR	1	
Q3008	2SA1037AK/QR	TRANSISTOR	1	
Q3009,10	2SC2412K	TRANSISTOR	2	
Q3011	2SC2229/Y/	TRANSISTOR	1	
Q3012	2SC2412K	TRANSISTOR	1	
Q3013	2SA1037AK/QR	TRANSISTOR	1	
Q3101	2SC3950/CDE/	POW TRANSISTOR	1	
Q3102	2SC4474/D/	POW TRANSISTOR	1	
Q3103	2SC3955/D/	POW TRANSISTOR	1	
Q3104	2SA1540/D/	POW TRANSISTOR	1	
Q3105	2SC3334	TRANSISTOR	1	
Q3106	2SA1321	TRANSISTOR	1	
Q3201	2SC3950/CDE/	POW TRANSISTOR	1	
Q3202	2SC4474/D/	POW TRANSISTOR	1	
Q3203	2SC3955/D/	POW TRANSISTOR	1	
Q3204	2SA1540/D/	POW TRANSISTOR	1	
Q3205	2SC3334	TRANSISTOR	1	
Q3206	2SA1321	TRANSISTOR	1	
Q3301	2SC3950/CDE/	POW TRANSISTOR	1	
Q3302	2SC4474/D/	POW TRANSISTOR	1	
Q3303	2SC3955/D/	POW TRANSISTOR	1	
Q3304	2SA1540/D/	POW TRANSISTOR	1	
Q3305	2SC3334	TRANSISTOR	1	
Q3306	2SA1321	TRANSISTOR	1	
R3001	NRSA02J-103X	M.RESISTOR 1/10W 10K	1	
R3002	NRSA02J-332X	M.RESISTOR 1/10W 3.3K	1	
R3003	NRSA02J-103X	M.RESISTOR 1/10W 10K	1	
R3004	NRSA02J-680X	M.RESISTOR 1/10W 68	1	
R3005	QRL029J-152	M.RESISTOR 2W 1.5K	1	
R3006	QRL029J-182	M.RESISTOR 2W 1.8K	1	
R3007	QRK126J-474X	C.RESISTOR 1/2W 470K	1	
⚠ R3008	QRZ9017-471	F.RESISTOR 1/4W 470	1	
R3009	QRK126J-223X	C.RESISTOR 1/2W 22K	1	
R3011	NRSA02J-103X	M.RESISTOR 1/10W 10K	1	
R3012	QRK126J-152X	C.RESISTOR 1/2W 1.5K	1	
⚠ R3013,14	QRZ9011-100	F.RESISTOR 1/2W 10	2	
R3015	QRC121K-473Z	C.RESISTOR 1/2W 47K	1	
R3017	NRSA02J-273X	M.RESISTOR 1/10W 27K	1	
R3018	NRSA02J-223X	M.RESISTOR 1/10W 22K	1	
⚠ R3021	QRK126J-102X	C.RESISTOR 1/2W 1K	1	
R3022	NRSA02J-122X	M.RESISTOR 1/10W 1.2K	1	
R3023	NRSA02J-103X	M.RESISTOR 1/10W 10K	1	
R3024	NRSA02J-332X	M.RESISTOR 1/10W 3.3K	1	
R3025	NRSA02J-103X	M.RESISTOR 1/10W 10K	1	
R3026	NRSA02J-152X	M.RESISTOR 1/10W 1.5K	1	
R3027	NRSA02J-153X	M.RESISTOR 1/10W 15K	1	
R3028	NRSA02J-152X	M.RESISTOR 1/10W 1.5K	1	
R3029	QRK126J-473X	C.RESISTOR 1/2 47K	1	
R3031	NRSA02J-472X	M.RESISTOR 1/10W 4.7K	1	
R3033	QRK126J-104X	C.RESISTOR 1/2W 100K	1	
R3034,35	NRSA02J-152X	M.RESISTOR 1/10W 1.5K	2	
R3036,37	NRSA02J-103X	M.RESISTOR 1/10W 10K	2	
R3038	NRSA02J-472X	M.RESISTOR 1/10W 4.7K	1	
R3039	NRSA02J-0R0X	M.RESISTOR 1/10W 0	1	
R3040	NRSA02J-182X	M.RESISTOR 1/10W 1.8K	1	
R3101	NRSA02J-470X	M.RESISTOR 1/10W 47	1	
R3102,03	NRSA02J-121X	M.RESISTOR 1/10W 120	2	
R3104	NRSA02J-390X	M.RESISTOR 1/10W 39	1	
R3105	NRSA02J-470X	M.RESISTOR 1/10W 47	1	
R3106,07	QRL039J-472	M.RESISTOR 3W 4.7K	2	
⚠ R3108,09	QRZ9017-150	F.RESISTOR 1/4W 15	2	
⚠ R3110	QRZ9017-471	F.RESISTOR 1/4W 470	1	
R3111	NRSA02J-392X	M.RESISTOR 1/10W 3.9K	1	
R3112	NRSA02J-332X	M.RESISTOR 1/10W 3.3K	1	
R3115	NRSA02J-0R0X	M.RESISTOR 1/10W 0	1	
R3116	NRSA02J-182X	M.RESISTOR 1/10W 1.8K	1	
R3117	QRC121K-101Z	C.RESISTOR 1/2W 100	1	

Components identified with the mark ⚠ have special characteristics for safety.
When replacing any of these component, use only the same type.

Ref.No.	Part No.	Part Name & Description	Pcs	Remarks
R3201	NRSA02J-470X	M.RESISTOR 1/10W 47	1	
R3202,03	NRSA02J-121X	M.RESISTOR 1/10W 120	2	
R3204,05	NRSA02J-470X	M.RESISTOR 1/10W 47	2	
R3206,07	QRL039J-472	M.RESISTOR 3W 4.7K	2	
⚠ R3208,09	QRZ9017-150	F.RESISTOR 1/4W 15	2	
⚠ R3210	QRZ9017-471	F.RESISTOR 1/4W 470	1	
R3211	NRSA02J-392X	M.RESISTOR 1/10W 3.9K	1	
R3212	NRSA02J-332X	M.RESISTOR 1/10W 3.3K	1	
R3215	NRSA02J-0R0X	M.RESISTOR 1/10W 0	1	
R3217	QRC121K-101Z	C.RESISTOR 1/2W 100	1	
R3301	NRSA02J-470X	M.RESISTOR 1/10W 47	1	
R3302,03	NRSA02J-121X	M.RESISTOR 1/10W 120	2	
R3304	NRSA02J-390X	M.RESISTOR 1/10W 39	1	
R3305	NRSA02J-470X	M.RESISTOR 1/10W 47	1	
R3306,07	QRL039J-472	M.RESISTOR 3W 4.7K	2	
⚠ R3308,09	QRZ9017-150	F.RESISTOR 1/4W 15	2	
⚠ R3310	QRZ9017-471	F.RESISTOR 1/4W 470	1	
R3311	NRSA02J-392X	M.RESISTOR 1/10W 3.9K	1	
R3312	NRSA02J-332X	M.RESISTOR 1/10W 3.3K	1	
R3315	NRSA02J-0R0X	M.RESISTOR 1/10W 0	1	
R3316	NRSA02J-182X	M.RESISTOR 1/10W 1.8K	1	
R3317	QRC121K-101Z	C.RESISTOR 1/2W 100	1	
SG3001	CE42447-242	ARRESTOR	1	
SG3101	QAF0006-201	SURGE ABSORBER 200V	1	
SG3201	QAF0006-201	SURGE ABSORBER 200V	1	
SG3301	QAF0006-201	SURGE ABSORBER 200V	1	
⚠ SK3001	CE42670-002	CRT SOCKET	1	
■	FX-4089A	FRONT CONTROL P.C.BOARD	1	(RTL)
D4101	MA111	DIODE	1	
C4101	NEH71CM-476X	E.CAPACITOR 16V 47U	1	
D4102	MA111	DIODE	1	
C4102	NCF21HZ-103X	C.CAPACITOR 50V 0.01U	1	
D4103-19	MA111	DIODE	17	
D4120	GL3ED8	DIODE	1	B3AGA0000029 POWER
IC4101	JLC1562BF	IC	1	
Q4101	2SA1037AK/QR	TRANSISTOR	1	
Q4102-05	2SC2412K	TRANSISTOR	4	
Q4106-11	2SA1037AK/QR	TRANSISTOR	6	
Q4112-14	2SC2412K	TRANSISTOR	3	
Q4120	2SC2412K	TRANSISTOR	1	
R4101	NRSA02J-391X	M.RESISTOR 1/10W 390	1	
R4102	NRSA02J-470X	M.RESISTOR 1/10W 47	1	
R4103	NRSA02J-391X	M.RESISTOR 1/10W 390	1	
R4104	NRSA02J-103X	M.RESISTOR 1/10W 10K	1	
R4105	NRSA02J-391X	M.RESISTOR 1/10W 390	1	
R4106	NRSA02J-103X	M.RESISTOR 1/10W 10K	1	
R4107	NRSA02J-391X	M.RESISTOR 1/10W 390	1	
R4108	NRSA02J-103X	M.RESISTOR 1/10W 10K	1	
R4109	NRSA02J-391X	M.RESISTOR 1/10W 390	1	
R4110	NRSA02J-103X	M.RESISTOR 1/10W 10K	1	
R4111	NRSA02J-391X	M.RESISTOR 1/10W 390	1	
R4112	NRSA02J-103X	M.RESISTOR 1/10W 10K	1	
R4113	NRSA02J-391X	M.RESISTOR 1/10W 390	1	
R4114	NRSA02J-103X	M.RESISTOR 1/10W 10K	1	
R4119	NRSA02J-391X	M.RESISTOR 1/10W 390	1	
R4120	NRSA02J-103X	M.RESISTOR 1/10W 10K	1	
R4121	NRSA02J-391X	M.RESISTOR 1/10W 390	1	
R4122	NRSA02J-103X	M.RESISTOR 1/10W 10K	1	
R4123	NRSA02J-391X	M.RESISTOR 1/10W 390	1	
R4124	NRSA02J-103X	M.RESISTOR 1/10W 10K	1	
R4125	NRSA02J-391X	M.RESISTOR 1/10W 390	1	
R4126	NRSA02J-103X	M.RESISTOR 1/10W 10K	1	
R4127	NRSA02J-391X	M.RESISTOR 1/10W 390	1	

Ref.No.	Part No.	Part Name & Description	Pcs	Remarks
R4128	NRSA02J-103X	M.RESISTOR 1/10W 10K	1	
R4129	NRSA02J-391X	M.RESISTOR 1/10W 390	1	
R4130	NRSA02J-103X	M.RESISTOR 1/10W 10K	1	
R4131	NRSA02J-391X	M.RESISTOR 1/10W 390	1	
R4132-42	NRSA02J-103X	M.RESISTOR 1/10W 10K	11	
R4150	NRSA02J-123X	M.RESISTOR 1/10W 12K	1	
R4151,52	NRSA02J-102X	M.RESISTOR 1/10W 1K	2	
S4101	QSW0619-003Z	SWITCH	1	POWER
S4102-11	QSW0889-001	SWITCH	10	INPUT A
S4112	QSW0619-003Z	SWITCH	1	VOL-
S4113-15	QSW0889-001	SWITCH	3	ASPECT
S4116-19	QSW0619-003Z	SWITCH	4	MENU
		MISCELLANEOUS		
	LC40656-001A	LED SPACER (2)	1	
■	FX-5028A	FRONT VR P.C.BOARD	1	(RTL)
C5101	QETN1CM-107Z	E.CAPACITOR 16V 100U	1	
C5102	NCF21HZ-103X	C.CAPACITOR 50V 0.01U	1	
D5101-04	MA3056-M	DIODE	4	
R5101-04	NRSA02J-333X	M.RESISTOR 1/10W 33K	4	
VR5101-04	QVQ0286-B14	V.RESISTOR 10K	4	PHASE
■	FX-6142A	MOTHER P.C.BOARD	1	(RTL)
C6101	QEHR1CM-107Z	E.CAPACITOR 16V 100U	1	
C6102	NCF21HZ-103X	C.CAPACITOR 50V 0.01U	1	
C6103	QEHR1CM-107Z	E.CAPACITOR 16V 100U	1	
C6104	NCF21HZ-103X	C.CAPACITOR 50V 0.01U	1	
C6105-18	QEHR1VM-476Z	E.CAPACITOR 35V 47U	14	
C6119	QEHR1CM-107Z	E.CAPACITOR 16V 100U	1	
C6120	NCF21HZ-103X	C.CAPACITOR 50V 0.01U	1	
C6121-26	QEHR1HM-106Z	E.CAPACITOR 50V 10U	6	
C6127	QEHR1VM-476Z	E.CAPACITOR 35V 47U	1	
C6128-33	QEHR1HM-106Z	E.CAPACITOR 50V 10U	6	
C6137	QEHR1CM-107Z	E.CAPACITOR 16V 100U	1	
C6138	NCF21HZ-103X	C.CAPACITOR 50V 0.01U	1	
C6139-43	QEHR1VM-476Z	E.CAPACITOR 35V 47U	5	
C6145-47	NDC21HJ-100X	C.CAPACITOR 50V 10P	3	
C6201	QEHR1VM-476Z	E.CAPACITOR 35V 47U	1	
C6202	NCF21HZ-104X	C.CAPACITOR 50V 0.1U	1	
C6203	QEHQ1EM-228	E.CAPACITOR 25V 2200U	1	
C6204	QEHR1VM-476Z	E.CAPACITOR 35V 47U	1	
C6205	NCF21HZ-104X	C.CAPACITOR 50V 0.1U	1	
C6206	QEHR1CM-107Z	E.CAPACITOR 16V 100U	1	
C6207,08	NCF21HZ-224X	C.CAPACITOR 50V 0.22U	2	
IC6101,02	TC4052BF	IC	2	
IC6103	JLC1562BF	IC	1	
IC6104,05	M52055FP	IC	2	C1AB00000734
IC6106-09	NJM2234MA	IC	4	C1AB00000400
IC6110	TC4052BF	IC	1	
IC6111	M52055FP	IC	1	C1AB00000734
IC6201	BA12FP	IC	1	
IC6202	BA05FP	IC	1	
Q6101-03	2SC2412K	TRANSISTOR	3	
R6101-09	NRSA02J-223X	M.RESISTOR 1/10W 22K	9	

Components identified with the mark ⚠ have special characteristics for safety.
When replacing any of these component, use only the same type.

Ref.No.	Part No.	Part Name & Description	Pcs	Remarks
R6113	NRSA02J-103X	M.RESISTOR 1/10W 10K	1	
R6117	NRSA02J-103X	M.RESISTOR 1/10W 10K	1	
R6118	NRSA02J-183X	M.RESISTOR 1/10W 18K	1	
R6119	NRSA02J-333X	M.RESISTOR 1/10W 33K	1	
R6120	NRSA02J-102X	M.RESISTOR 1/10W 1K	1	
R6121	NRSA02J-183X	M.RESISTOR 1/10W 18K	1	
R6122	NRSA02J-333X	M.RESISTOR 1/10W 33K	1	
R6123	NRSA02J-332X	M.RESISTOR 1/10W 3.3K	1	
R6124	NRSA02J-183X	M.RESISTOR 1/10W 18K	1	
R6125	NRSA02J-333X	M.RESISTOR 1/10W 33K	1	
R6126	NRSA02J-332X	M.RESISTOR 1/10W 3.3K	1	
R6133	NRSA02J-103X	M.RESISTOR 1/10W 10K	1	
R6150-67	NRSA02J-103X	M.RESISTOR 1/10W 10K	18	
R6168-72	NRSA02J-0R0X	M.RESISTOR 1/10W 0	5	
■	FX-7055A	LED P.C.BOARD	1	(RTL)
D7101	SEC1601C-X	LED	1	TALLY lamp RED
D7102	SECU1D01C-X	LED	1	TALLY lamp GREEN
D7103	SEC1601C-X	LED	1	TALLY lamp RED
D7104	SECU1D01C-X	LED	1	TALLY lamp GREEN
D7105	SEC1601C-X	LED	1	TALLY lamp RED
D7106	SECU1D01C-X	LED	1	TALLY lamp GREEN
R7101	NRS144J-391X	M.RESISTOR 1/4W 390	1	
R7102	NRSA02J-122X	M.RESISTOR 1/10W 1.2K	1	
R7103	NRS144J-391X	M.RESISTOR 1/4W 390	1	
R7104	NRSA02J-122X	M.RESISTOR 1/10W 1.2K	1	
R7105	NRS144J-391X	M.RESISTOR 1/4W 390	1	
R7106	NRSA02J-122X	M.RESISTOR 1/10W 1.2K	1	
■	FX-8030A	REMOTE P.C.BOARD	1	(RTL)
C8101,02	NEH71HM-105X	E.CAPACITOR 50V 1U	2	
C8103	NEH70JM-107X	E.CAPACITOR 6.3V 100U	1	
C8104	NCF21HZ-103X	C.CAPACITOR 50V 0.01U	1	
C8105,06	NEH71HM-105X	E.CAPACITOR 50V 1U	2	
D8101-16	MA3120-M	DIODE	16	
D8117-44	MA111	DIODE	28	
IC8101	ADM237LJR-X	IC	1	
IC8102,03	JLC1562BF	IC	2	
J8101	QNZ0060-001	CONNECTOR	1	RS232C INPUT
J8102	QNZ0061-001	CONNECTOR	1	MAKE INPUT
R8101-08	NRSA02J-151X	M.RESISTOR 1/10W 150	8	
R8109-12	NRZ0040-101X	COMBI.R-R 100	4	
R8123-40	NRSA02J-103X	M.RESISTOR 1/10W 10K	18	
R8141	NRSA02J-0R0X	M.RESISTOR 1/10W 0	1	

Components identified with the mark ⚠ have special characteristics for safety.
When replacing any of these component, use only the same type.

BT-LH1700BMC

Ref.No.	Part No.	Part Name & Description	Pcs	Remarks
■	FX-1186A	SIGNAL P.C.BOARD	1	(RTL)
■	FX-2094A	MAIN P.C.BOARD	1	(RTL)
■	FX-2120A	S.CORRECTION P.C.BOARD	1	(RTL)
■	FX-3074A	CRT SOCKET P.C.BOARD	1	(RTL)
■	FX-4089A	FRONT CONTROL P.C.BOARD	1	(RTL)
■	FX-5028A	FRONT VR P.C.BOARD	1	(RTL)
■	FX-6142A	MOTHER P.C.BOARD	1	(RTL)
■	FX-7055A	LED P.C.BOARD	1	(RTL)
■	FX-8030A	REMOTE P.C.BOARD	1	(RTL)
■	FX-M048A	SUB DEF MODULE P.C.BOARD	1	(RTL)
■	FX-M049A	HV CONTROL MODULE P.C.B.	1	(RTL)
■	FX-1186A	SIGNAL P.C.BOARD	1	(RTL)
C1103	NEH71HM-474X	E.CAPACITOR 50V 0.47U	1	
C1104	NEN51HM-105X	E.CAPACITOR 50V 1U	1	
C1106	NEH71EM-475X	E.CAPACITOR 25V 4.7U	1	
C1107	NEN51CM-475X	E.CAPACITOR 16V 4.7U	1	
C1108	NEH71EM-475X	E.CAPACITOR 25V 4.7U	1	
C1109	NCB21HK-472X	C.CAPACITOR 50V 4700P	1	
C1110	NCB21EK-683X	C.CAPACITOR 25V 0.068U	1	
C1111	NEH71HM-105X	E.CAPACITOR 50V 1U	1	
C1112	NCB21HK-103X	C.CAPACITOR 50V 0.01U	1	
C1113	NDC21HJ-121X	C.CAPACITOR 50V 120P	1	
C1114	NDC21HJ-820X	C.CAPACITOR 50V 82P	1	
C1115	NEH70JM-107X	E.CAPACITOR 6.3V 100U	1	
C1116	NCF21HZ-103X	C.CAPACITOR 50V 0.01U	1	
C1117	NEH71CM-106X	E.CAPACITOR 16V 10U	1	
C1118	NCF21HZ-103X	C.CAPACITOR 50V 0.01U	1	
C1119	NDC21HJ-101X	C.CAPACITOR 50V 100P	1	
C1121	NEH71CM-476X	E.CAPACITOR 16V 47U	1	
C1122	NDC21HJ-330X	C.CAPACITOR 50V 33P	1	
C1123	NCB21HK-102X	C.CAPACITOR 50V 1000P	1	
C1132	NCF21HZ-104X	C.CAPACITOR 50V 0.1U	1	
C1133	NDC21HJ-100X	C.CAPACITOR 50V 10P	1	
C1134	NDC21HJ-271X	C.CAPACITOR 50V 270P	1	
C1141	NEH70JM-107X	E.CAPACITOR 6.3V 100U	1	
C1142-48	NCF21HZ-104X	C.CAPACITOR 50V 0.1U	7	
C1149	NCB20JM-475X	C.CAPACITOR 6.3V 4.7U	1	
C1150	NCB21HK-103X	C.CAPACITOR 50V 0.01U	1	
C1151	NCB21HK-152X	C.CAPACITOR 50V 1500U	1	
C1162	NEH70GM-227X	E.CAPACITOR 4V 220U	1	
C1163	NCF21HZ-224X	C.CAPACITOR 50V 0.22U	1	
C1164,65	NCF21HZ-104X	C.CAPACITOR 50V 0.1U	2	
C1167	NCB20JM-475X	C.CAPACITOR 6.3V 4.7U	1	
C1168	QEHR1EM-107Z	E.CAPACITOR 25V 100U	1	
C1171,72	NDC21HJ-220X	C.CAPACITOR 50V 22P	2	
C1173	NEH70JM-107X	E.CAPACITOR 6.3V 100U	1	

Ref.No.	Part No.	Part Name & Description	Pcs	Remarks
C1601-04	NEN51AM-336X	E.CAPACITOR 10V 33U	4	
C1605	NEH71HM-225X	E.CAPACITOR 50V 2.2U	1	
C1606-09	NEN51AM-336X	E.CAPACITOR 10V 33U	4	
C1610	NEH71HM-225X	E.CAPACITOR 50V 2.2U	1	
C1611-14	NEN51AM-336X	E.CAPACITOR 10V 33U	4	
C1615	NEH71HM-225X	E.CAPACITOR 50V 2.2U	1	
C1616,17	NDC21HJ-120X	C.CAPACITOR 50V 12P	2	
C1618	NCB21CK-224X	C.CAPACITOR 16V 0.22U	1	
C1619	NCF21HZ-223X	C.CAPACITOR 50V 0.22U	1	
C1620	NEH71CM-476X	E.CAPACITOR 16V 47U	1	
C1621	NCF21HZ-103X	C.CAPACITOR 50V 0.01U	1	
C1622,23	NCB21EK-104X	C.CAPACITOR 25V 0.1U	2	
C1624	NEH71HM-225X	E.CAPACITOR 50V 2.2U	1	
C1625	NCB21HK-223X	C.CAPACITOR 50V 0.022U	1	
C1626	NEH71CM-106X	E.CAPACITOR 16V 10U	1	
C1627	NEH71AM-107X	C.CAPACITOR 10V 100U	1	
C1628	NCF21HZ-103X	C.CAPACITOR 50V 0.01U	1	
C1629,30	NEH71HM-225X	E.CAPACITOR 50V 2.2U	2	
C1631-36	NCB21EK-104X	C.CAPACITOR 25V 0.1U	6	
C1637	NCF21HZ-103X	C.CAPACITOR 50V 0.01U	1	
C1638	NEH71AM-107X	C.CAPACITOR 10V 100U	1	
C1639	NEH71CM-476X	E.CAPACITOR 16V 47U	1	
C1640	NEH71HM-105X	E.CAPACITOR 50V 1U	1	
C1641	NEH71AM-107X	C.CAPACITOR 10V 100U	1	
C1642	NCF21HZ-103X	C.CAPACITOR 50V 0.01U	1	
C1643	NEH71HM-225X	E.CAPACITOR 50V 2.2U	1	
C1644	NEH71CM-106X	E.CAPACITOR 16V 10U	1	
C1645	NCB21EK-104X	C.CAPACITOR 25V 0.1U	1	
C1646,47	NCB21CK-474X	C.CAPACITOR 16V 0.47U	2	
C1648,49	NEH71HM-225X	E.CAPACITOR 50V 2.2U	2	
C1651,52	NEH71AM-107X	C.CAPACITOR 10V 100U	2	
C1653	NCF21HZ-103X	C.CAPACITOR 50V 0.01U	1	
C1654	NEH71CM-476X	E.CAPACITOR 16V 47U	1	
C1655	NCF21HZ-103X	C.CAPACITOR 50V 0.01U	1	
C1656	NEH71AM-107X	C.CAPACITOR 10V 100U	1	
C1657,58	NCF21HZ-103X	C.CAPACITOR 50V 0.01U	2	
C1659	NDC21HJ-151X	C.CAPACITOR 50V 150P	1	
C1660	NCB21EK-104X	C.CAPACITOR 25V 0.1U	1	
C1662	NCB21EK-104X	C.CAPACITOR 25V 0.1U	1	
C1663	NEH71AM-107X	C.CAPACITOR 10V 100U	1	
C1664	NCB21EK-104X	C.CAPACITOR 25V 0.1U	1	
C1665-67	NEH71AM-107X	C.CAPACITOR 10V 100U	3	
C1668	NDC21HJ-271X	C.CAPACITOR 50V 270P	1	
C1801	NCF21HZ-104X	C.CAPACITOR 50V 0.1U	1	
C1802	NEH70JM-107X	E.CAPACITOR 6.3V 100U	1	
C1803	NCF21HZ-103X	C.CAPACITOR 50V 0.01U	1	
C1804	NDC21HJ-271X	C.CAPACITOR 50V 270P	1	
C1806	NCF21HZ-103X	C.CAPACITOR 50V 0.01U	1	
C1807	NCB21HK-472X	C.CAPACITOR 50V 4700P	1	
C1808	NCF21EZ-104X	C.CAPACITOR 25V 0.1U	1	
C1809	NEH71HM-105X	E.CAPACITOR 50V 1U	1	
C1810	NEH71CM-476X	E.CAPACITOR 16V 47U	1	
C1811	NCF21HZ-103X	C.CAPACITOR 50V 0.01U	1	
C1812	NCF21HZ-104X	C.CAPACITOR 50V 0.1U	1	
C1813	NEH70JM-107X	E.CAPACITOR 6.3V 100U	1	
C1814	NCF21HZ-103X	C.CAPACITOR 50V 0.01U	1	
C1815	NDC21HJ-271X	C.CAPACITOR 50V 270P	1	
C1816	NCB21HK-222X	C.CAPACITOR 50V 2200P	1	
D1103,04	MA111	DIODE	2	
D1601,02	MA111	DIODE	2	
D1605	MA111	DIODE	1	
D1606	MA3030-H	DIODE	1	
D1607-18	MA111	DIODE	12	
D1619	MA2Z720-X	SB DIODE	1	
D1620,21	MA111	DIODE	2	
D1801-06	MA3051-M	DIODE	6	
D1807	MA2Z720-X	SB DIODE	1	
D1808-18	MA3051-M	DIODE	11	
IC1101	M52346SP	IC	1	
IC1104	EPF6024ATC14	IC	1	
IC1105	EP2LC20V171C	IC (DIGITAL)	1	(SERVICE)
IC1106	TLC2932IPW	IC	1	
IC1109	BA033FP	IC	1	

Components identified with the mark ⚠ have special characteristics for safety.
When replacing any of these component, use only the same type.

Ref.No.	Part No.	Part Name & Description	Pcs	Remarks
IC1601	TA1276AN	IC	1	
IC1602	M52055FP	IC	1	C1AB00000734
IC1603	TC4053BFNXE	IC	1	
IC1604	M52055FP	IC	1	C1AB00000734
IC1605	TC4053BFNXE	IC	1	
IC1606	M52055FP	IC	1	C1AB00000734
IC1607	TC4053BFNXE	IC	1	
IC1608	BA09FP	IC	1	
IC1801	MB90F553V171	IC	1	(SERVICE)
IC1802	MN1382-Q	IC	1	
IC1803	TC4053BFNXE	IC	1	
IC1804	M35045-075SP	IC	1	
IC1805	AT24C16V171C	IC	1	(SERVICE)
K1101-03	NQR0357-002X	FERRITE BEADS	3	
Q1101	2SC2412K	TRANSISTOR	1	
Q1102	2SA1037AK/QR	TRANSISTOR	1	
Q1103-07	2SC2412K	TRANSISTOR	5	
Q1108	2SA1037AK/QR	TRANSISTOR	1	
Q1109	DTC124EKA	TRANSISTOR	1	
Q1110	2SC2412K	TRANSISTOR	1	
Q1111-13	DTC124EKA	TRANSISTOR	3	
Q1601,02	2SC2412K	TRANSISTOR	2	
Q1603	2SA1037AK/QR	TRANSISTOR	1	
Q1604,05	2SC2412K	TRANSISTOR	2	
Q1606	2SA1037AK/QR	TRANSISTOR	1	
Q1607,08	2SC2412K	TRANSISTOR	2	
Q1609	2SA1037AK/QR	TRANSISTOR	1	
Q1610,11	2SC2412K	TRANSISTOR	2	
Q1612	2SA1037AK/QR	TRANSISTOR	1	
Q1613,14	2SC2412K	TRANSISTOR	2	
Q1615	2SA1037AK/QR	TRANSISTOR	1	
Q1616,17	2SC2412K	TRANSISTOR	2	
Q1618	2SA1037AK/QR	TRANSISTOR	1	
Q1619-21	2SC2412K	TRANSISTOR	3	
Q1626	2SA1037AK/QR	TRANSISTOR	1	
Q1631,32	DTC124EKA	TRANSISTOR	2	
Q1801,02	2SC2412K	TRANSISTOR	2	
Q1803	DTC124EKA	TRANSISTOR	1	
Q1804,05	2SC2412K	TRANSISTOR	2	
R1101	NRSA02J-101X	M.RESISTOR 1/10W 100	1	
R1102	NRSA02J-0R0X	M.RESISTOR 1/10W 0	1	
R1103	NRSA02J-102X	M.RESISTOR 1/10W 1K	1	
R1104	NRSA02J-104X	M.RESISTOR 1/10W 100K	1	
R1105	NRSA02J-154X	M.RESISTOR 1/10W 150K	1	
R1106	NRSA02J-473X	M.RESISTOR 1/10W 47K	1	
R1107	NRSA02J-273X	M.RESISTOR 1/10W 27K	1	
R1108-10	NRSA02J-102X	M.RESISTOR 1/10W 1K	3	
R1111	NRSA02J-183X	M.RESISTOR 1/10W 18K	1	
R1112,13	NRSA02J-101X	M.RESISTOR 1/10W 100	2	
R1114	NRSA02J-102X	M.RESISTOR 1/10W 1K	1	
R1120	NRSA02J-104X	M.RESISTOR 1/10W 100K	1	
R1121	NRSA02J-273X	M.RESISTOR 1/10W 27K	1	
R1122	NRSA02J-182X	M.RESISTOR 1/10W 1.8K	1	
R1123	NRSA02J-122X	M.RESISTOR 1/10W 1.2K	1	
R1124	NRSA02J-272X	M.RESISTOR 1/10W 2.7K	1	
R1125	NRSA02J-182X	M.RESISTOR 1/10W 1.8K	1	
R1126	NRSA02J-272X	M.RESISTOR 1/10W 2.7K	1	
R1128	NRSA02J-334X	M.RESISTOR CH 1/10W 3.3K	1	
R1129,30	NRSA02J-102X	M.RESISTOR 1/10W 1K	2	
R1131,32	NRSA02J-101X	M.RESISTOR 1/10W 100	2	
R1135	NRSA02J-0R0X	M.RESISTOR 1/10W 0	1	
R1136	NRSA02J-103X	M.RESISTOR 1/10W 10K	1	
R1137	NRSA02J-102X	M.RESISTOR 1/10W 1K	1	
R1138	NRSA02J-103X	M.RESISTOR 1/10W 10K	1	
R1139	NRSA02J-102X	M.RESISTOR 1/10W 1K	1	
R1140-45	NRSA02J-103X	M.RESISTOR 1/10W 10K	6	
R1146-49	NRSA02J-102X	M.RESISTOR 1/10W 1K	4	
R1150	NRSA02J-103X	M.RESISTOR 1/10W 10K	1	
R1151-54	NRSA02J-102X	M.RESISTOR 1/10W 1K	4	
R1161	NRSA02J-103X	M.RESISTOR 1/10W 10K	1	
R1162,63	NRSA02J-221X	M.RESISTOR 1/10W 220	2	
R1164	NRSA02J-101X	M.RESISTOR 1/10W 100	1	

Ref.No.	Part No.	Part Name & Description	Pcs	Remarks
R1166	NRSA02J-102X	M.RESISTOR 1/10W 1K	1	
R1168	NRSA02J-391X	M.RESISTOR 1/10W 390	1	
R1170	NRSA02J-332X	M.RESISTOR 1/10W 3.3K	1	
R1175	NRSA02J-472X	M.RESISTOR 1/10W 4.7K	1	
R1176	NRSA02J-221X	M.RESISTOR 1/10W 220	1	
R1177-79	NRSA02J-102X	M.RESISTOR 1/10W 1K	3	
R1180	NRSA02J-0R0X	M.RESISTOR 1/10W 0	1	
R1181	NRSA02J-103X	M.RESISTOR 1/10W 10K	1	
R1182	NRSA02J-0R0X	M.RESISTOR 1/10W 0	1	
R1183	NRSA02J-222X	M.RESISTOR 1/10W 2.2K	1	
R1601	NRSA02J-101X	M.RESISTOR 1/10W 100	1	
R1602	NRSA02J-561X	M.RESISTOR 1/10W 560	1	
R1603,04	NRSA02J-272X	M.RESISTOR 1/10W 2.7K	2	
R1605	NRSA02J-561X	M.RESISTOR 1/10W 560	1	
R1606	NRSA02J-272X	M.RESISTOR 1/10W 2.7K	1	
R1607	NRSA02J-101X	M.RESISTOR 1/10W 100	1	
R1608	NRSA02J-272X	M.RESISTOR 1/10W 2.7K	1	
R1609	NRSA02J-101X	M.RESISTOR 1/10W 100	1	
R1610	NRSA02J-561X	M.RESISTOR 1/10W 560	1	
R1611,12	NRSA02J-272X	M.RESISTOR 1/10W 2.7K	2	
R1613	NRSA02J-561X	M.RESISTOR 1/10W 560	1	
R1614	NRSA02J-272X	M.RESISTOR 1/10W 2.7K	1	
R1615	NRSA02J-101X	M.RESISTOR 1/10W 100	1	
R1616	NRSA02J-272X	M.RESISTOR 1/10W 2.7K	1	
R1617	NRSA02J-101X	M.RESISTOR 1/10W 100	1	
R1618	NRSA02J-561X	M.RESISTOR 1/10W 560	1	
R1619,20	NRSA02J-272X	M.RESISTOR 1/10W 2.7K	2	
R1621	NRSA02J-561X	M.RESISTOR 1/10W 560	1	
R1622	NRSA02J-272X	M.RESISTOR 1/10W 2.7K	1	
R1623	NRSA02J-101X	M.RESISTOR 1/10W 100	1	
R1624	NRSA02J-272X	M.RESISTOR 1/10W 2.7K	1	
R1625	NRSA02J-102X	M.RESISTOR 1/10W 1K	1	
R1626-28	NRSA02J-563X	M.RESISTOR 1/10W 56K	3	
R1629	NRSA02J-333X	M.RESISTOR 1/10W 33K	1	
R1630	NRSA02J-272X	M.RESISTOR 1/10W 2.7K	1	
R1631	NRSA02J-391X	M.RESISTOR 1/10W 390	1	
R1632	NRSA02J-101X	M.RESISTOR 1/10W 100	1	
R1633,34	NRSA02J-0R0X	M.RESISTOR 1/10W 0	2	
R1635	NRSA02J-103X	M.RESISTOR 1/10W 10K	1	
R1636-41	NRSA02J-101X	M.RESISTOR 1/10W 100	6	
R1642	NRSA02J-332X	M.RESISTOR 1/10W 3.3K	1	
R1644-46	NRSA02J-471X	M.RESISTOR 1/10W 470	3	
R1647-49	NRSA02J-101X	M.RESISTOR 1/10W 100	3	
R1651,52	NRSA02J-562X	M.RESISTOR 1/10W 5.6K	2	
R1653-55	NRSA02J-392X	M.RESISTOR 1/10W 3.9K	3	
R1656-58	NRSA02J-271X	M.RESISTOR 1/10W 270	3	
R1659	NRSA02J-561X	M.RESISTOR 1/10W 560	1	
R1660	NRSA02J-473X	M.RESISTOR 1/10W 47K	1	
R1663	NRSA02J-0R0X	M.RESISTOR 1/10W 0	1	
R1664	NRSA02J-102X	M.RESISTOR 1/10W 1K	1	
R1671	NRSA02J-562X	M.RESISTOR 1/10W 5.6K	1	
R1672,73	NRSA02J-0R0X	M.RESISTOR 1/10W 0	2	
R1674	NRSA02J-153X	M.RESISTOR 1/10W 15K	1	
R1675,76	NRSA02J-183X	M.RESISTOR 1/10W 18K	2	
R1677	NRSA02J-0R0X	M.RESISTOR 1/10W 0	1	
R1678	NRSA02J-153X	M.RESISTOR 1/10W 15K	1	
R1679,80	NRSA02J-183X	M.RESISTOR 1/10W 18K	2	
R1681	NRSA02J-0R0X	M.RESISTOR 1/10W 0	1	
R1682	NRSA02J-153X	M.RESISTOR 1/10W 15K	1	
R1683,84	NRSA02J-183X	M.RESISTOR 1/10W 18K	2	
R1685-90	NRSA02J-561X	M.RESISTOR 1/10W 560	6	
R1693	NRSA02J-102X	M.RESISTOR 1/10W 1K	1	
R1694	NRSA02J-0R0X	M.RESISTOR 1/10W 0	1	
R1697	NRSA02J-0R0X	M.RESISTOR 1/10W 0	1	
R1701	NRSA02J-0R0X	M.RESISTOR 1/10W 0	1	
R1815-20	NRSA02J-101X	M.RESISTOR 1/10W 100	6	
R1825-28	NRSA02J-472X	M.RESISTOR 1/10W 4.7K	4	
R1829	NRSA02J-101X	M.RESISTOR 1/10W 100	1	
R1833-36	NRSA02J-101X	M.RESISTOR 1/10W 100	4	
R1846,47	NRSA02J-101X	M.RESISTOR 1/10W 100	2	
R1848	NRSA02J-103X	M.RESISTOR 1/10W 10K	1	
R1850-56	NRSA02J-103X	M.RESISTOR 1/10W 10K	7	
R1859	NRSA02J-101X	M.RESISTOR 1/10W 100	1	
R1860	NRSA02J-103X	M.RESISTOR 1/10W 10K	1	
R1861	NRSA02J-101X	M.RESISTOR 1/10W 100	1	

Components identified with the mark ⚠ have special characteristics for safety.
When replacing any of these component, use only the same type.

Ref.No.	Part No.	Part Name & Description	Pcs	Remarks
R1869	NRSA02J-103X	M.RESISTOR 1/10W 10K	1	
R1875-77	NRSA02J-103X	M.RESISTOR 1/10W 10K	3	
R1882	NRSA02J-101X	M.RESISTOR 1/10W 100	1	
R1890	NRSA02J-102X	M.RESISTOR 1/10W 1K	1	
R1891-93	NRSA02J-101X	M.RESISTOR 1/10W 100	3	
R1897,98	NRSA02J-472X	M.RESISTOR 1/10W 4.7K	2	
R1901-07	NRSA02J-101X	M.RESISTOR 1/10W 100	7	
R1911	NRSA02J-472X	M.RESISTOR 1/10W 4.7K	1	
R1912	NRSA02J-272X	M.RESISTOR 1/10W 2.7K	1	
R1913	NRSA02J-223X	M.RESISTOR 1/10W 22K	1	
R1914-16	NRSA02J-473X	M.RESISTOR 1/10W 47K	3	
R1917,18	NRSA02J-101X	M.RESISTOR 1/10W 100	2	
R1919-22	NRSA02J-472X	M.RESISTOR 1/10W 4.7K	4	
R1923	NRSA02J-104X	M.RESISTOR 1/10W 100K	1	
R1924	NRSA02J-272X	M.RESISTOR 1/10W 2.7K	1	
R1925	NRSA02J-223X	M.RESISTOR 1/10W 22K	1	
R1926	NRSA02J-222X	M.RESISTOR 1/10W 2.2K	1	
R1927	NRSA02J-0R0X	M.RESISTOR 1/10W 0	1	
RA1131	NRZ0040-103X	COMBI.R-R 10K	1	
RA1135,36	NRZ0040-101X	COMBI.R-R 100	2	
RA1801,02	NRZ0040-101X	COMBI.R-R 100	2	
RA1803-05	NRZ0040-103X	COMBI.R-R 10K	3	
RA1806-09	NRZ0040-101X	COMBI.R-R 100	4	
RA1810	NRZ0040-103X	COMBI.R-R 10K	1	
RA1811-14	NRZ0040-101X	COMBI.R-R 100	4	
X1601	CE40749-001Z	CRYSTAL OSCILLATOR	1	
X1602	CE40668-001Z	CRYSTAL OSCILLATOR	1	
X1603	CSB503F30	CRYSTAL OSCILLATOR	1	
X1801	CST4.00MGW	CERAMIC RESONAT	1	
■	FX-2094A	MAIN P.C.BOARD	1	(RTL)
C2401	QFLC1HJ-104Z	P.CAPACITOR 50V 100U	1	
C2402	QFV71HJ-334Z	P.CAPACITOR 50V 0.33U	1	
C2403	QCS31HJ-121Z	C.CAPACITOR 50V 120P	1	
C2404	QTMN1VM-107Z	E.CAPACITOR 35V 100U	1	
C2405	QCB32HK-151Z	C.CAPACITOR 500V 150P	1	
C2406	QFLC1HJ-563Z	P.CAPACITOR 50V 0.056U	1	
C2408	QFV71HJ-154Z	P.CAPACITOR 50V 0.15U	1	
C2409	QEHQ1EM-228	E.CAPACITOR 25V 2200U	1	
C2420	QEHQ1EM-228	E.CAPACITOR 25V 2200U	1	
C2501	QEZ0368-227	E.CAPACITOR 200V 220U	1	
C2502	QFLC2AK-224Z	P.CAPACITOR 50V 0.22U	1	
C2503	QCB32HK-151Z	C.CAPACITOR 500V 150P	1	
C2504	QEZ0097-106R	E.CAPACITOR 160V 10U	1	
C2506	QCB32HK-472Z	C.CAPACITOR 500V 4700P	1	
C2507	QFLC1HJ-222Z	P.CAPACITOR 50V 2200P	1	
C2508,09	QTMN1CM-107Z	E.CAPACITOR 16V 100U	2	
C2510	QFV71HJ-474Z	P.CAPACITOR 50V 0.47U	1	
C2511	QFLC1HJ-122Z	P.CAPACITOR 50V 1200P	1	
C2512	QTMN1EM-227Z	E.CAPACITOR 25V 220U	1	
C2513,14	QFLC1HJ-472Z	P.CAPACITOR 50V 4700P	2	
C2515	QFLC1HJ-392Z	P.CAPACITOR 50V 3900P	1	
C2516	QFLC2AK-224Z	P.CAPACITOR 50V 0.22U	1	
C2517	QEHR1HM-105Z	E.CAPACITOR 50V 1U	1	
C2518	QEHR1HM-476Z	E.CAPACITOR 50V 47U	1	
C2520	QFZ0196-202	P.CAPACITOR 1.5KV 2000P	1	
⚠ C2521	QFZ0196-302	P.CAPACITOR 1.5KV 3000P	1	
C2522	QFLC1HJ-823Z	P.CAPACITOR 50V 0.082U	1	
⚠ C2523	QFZ0196-302	P.CAPACITOR 1.5KV 3000P	1	
C2526	QCS31HJ-471Z	C.CAPACITOR 50V 470P	1	
C2527	QFLC1HJ-472Z	P.CAPACITOR 50V 4700P	1	
C2528	QEHR1CM-107Z	E.CAPACITOR 16V 100U	1	
C2550	QEHR1HM-475Z	E.CAPACITOR 50V 4.7U	1	
C2551	QFV71HJ-274Z	P.CAPACITOR 50V 0.27U	1	
C2552	QFZ0196-102	P.CAPACITOR 1.5KV 1000P	1	
C2553	QFV71HJ-274Z	P.CAPACITOR 50V 0.27U	1	
C2554	QEHQ2AM-227	E.CAPACITOR 100V 220U	1	

Ref.No.	Part No.	Part Name & Description	Pcs	Remarks
C2555	QFK62AK-334Z	P.CAPACITOR 100V 0.33U	1	
C2557	QEHR1EM-337Z	E.CAPACITOR 25V 330U	1	
C2558	QTNC1HM-105Z	E.CAPACITOR 50V 1M	1	
C2559,60	QEHR1HM-105Z	E.CAPACITOR 50V 1U	2	
C2562	QEHR2CM-336Z	E.CAPACITOR 160V 33U	1	
C2570	QEHR1HM-105Z	E.CAPACITOR 50V 1U	1	
C2571	QEHR1HM-106Z	E.CAPACITOR 50V 10U	1	
C2601	QTNC1HM-225Z	E.CAPACITOR 50V 2.2U	1	
C2602	QEHR1HM-106Z	E.CAPACITOR 50V 10U	1	
C2603	QCS31HJ-150Z	C.CAPACITOR 50V 15P	1	
C2604	QEHR2CM-336Z	E.CAPACITOR 160V 33U	1	
C2605	QTNC1HM-106Z	E.CAPACITOR 50V 10U	1	
C2606	QFLC1HJ-472Z	P.CAPACITOR 50V 4700P	1	
C2607	QTNC1HM-225Z	E.CAPACITOR 50V 2.2U	1	
C2608	QCS32HJ-271Z	C.CAPACITOR 500V 270P	1	
C2609	QEHR1HM-106Z	E.CAPACITOR 50V 10U	1	
C2610	QCB32HK-391Z	C.CAPACITOR 500V 390P	1	
C2620	QTMN1HM-336Z	E.CAPACITOR 50V 33U	1	
C2621	QFLC1HJ-563Z	P.CAPACITOR 50V 0.056U	1	
C2801	QEHQ1EM-228	E.CAPACITOR 25V 2200U	1	
C2802	QTNC1HM-105Z	E.CAPACITOR 50V 1M	1	
C2803	QFLC1HJ-332Z	P.CAPACITOR 50V 3300P	1	
C2804	QEHR1HM-225Z	E.CAPACITOR 50V 2.2U	1	
C2805	QEHR1HM-106Z	E.CAPACITOR 50V 10U	1	
C2806	QEHR1HM-475Z	E.CAPACITOR 50V 4.7U	1	
C2807,08	QEHR1HM-336Z	E.CAPACITOR 50V 33U	2	
C2809	QEHQ1EM-228	E.CAPACITOR 25V 2200U	1	
C2810,11	QFV71HJ-104Z	P.CAPACITOR 50V 0.1U	2	
C2812,13	QEHQ1EM-228	E.CAPACITOR 25V 2200U	2	
C2814	QEHR1CM-227Z	E.CAPACITOR 16V 110U	1	
⚠ C2901	QFZ9036-104	P.CAPACITOR 250V 0.1U	1	
⚠ C2902-05	QCZ9078-472	C.CAPACITOR 250V 4700P	4	
⚠ C2906	QEHQ2GM-226	E.CAPACITOR 40V 2.2U	1	
C2908	QEZ0587-567	E.CAPACITOR 400V 560U	1	
C2909	QCB32HK-472Z	C.CAPACITOR 500V 4700P	1	
C2910	QTMN1EM-107Z	E.CAPACITOR 25V 100U	1	
C2911	QCS31HJ-471Z	C.CAPACITOR 50V 470P	1	
⚠ C2912,13	QCZ9075-472	C.CAPACITOR 4700P	2	
⚠ C2914	QFZ9036-224	C.CAPACITOR 250V 0.22U	1	
C2915	QCZ0122-681	C.CAPACITOR 2KV 680P	1	
C2916-19	QCB32HK-271Z	C.CAPACITOR 500V 270P	4	
C2920	QTMN1EM-337Z	E.CAPACITOR 25V 330U	1	
C2921	QTMN1CM-107Z	E.CAPACITOR 16V 100U	1	
C2922	QTMN1EM-337Z	E.CAPACITOR 25V 330U	1	
C2923	QEZ0368-227	E.CAPACITOR 200V 220U	1	
C2924	QEHR1HM-106Z	E.CAPACITOR 50V 10U	1	
C2925	QEZ0368-227	E.CAPACITOR 200V 220U	1	
C2926	QEHQ1EM-228	E.CAPACITOR 25V 2200U	1	
C2927	QTMM1EM-228	E.CAPACITOR 25V 2200U	1	
C2928	QEHR1HM-106Z	E.CAPACITOR 50V 10U	1	
C2929	QFV71HJ-224Z	P.CAPACITOR 50V 0.22U	1	
C2930	QEHR1HM-106Z	E.CAPACITOR 50V 10U	1	
C2931	QEZ0256-228	E.CAPACITOR 10V 2200U	1	
C2932	QTMN1CM-107Z	E.CAPACITOR 16V 100U	1	
C2933	QEZ0256-128	E.CAPACITOR 10V 1200U	1	
C2934	QTMN1CM-107Z	E.CAPACITOR 16V 100U	1	
C2935	QEHR1EM-477Z	E.CAPACITOR 25V 470U	1	
C2936	QEHQ1EM-228	E.CAPACITOR 25V 2200U	1	
C2937	QEHR1HM-106Z	E.CAPACITOR 50V 10U	1	
C2939	QTMN1CM-107Z	E.CAPACITOR 16V 100U	1	
C2940	QFLC1HJ-103Z	P.CAPACITOR 50V 0.01U	1	
C2941	QFLC1HJ-102Z	P.CAPACITOR 50V 1000P	1	
C2942	QTNC1HM-106Z	E.CAPACITOR 50V 10U	1	
C2943	QFLC1HJ-102Z	P.CAPACITOR 50V 1000P	1	
C2944	QTMN1EM-477Z	E.CAPACITOR 25V 470U	1	
⚠ C2945,46	QCZ9078-472	C.CAPACITOR 250V 4700P	2	
C2947	QFVF1HJ-824Z	P.CAPACITOR 50V 0.82U	1	
C2950	QEHR1CM-107Z	E.CAPACITOR 16V 100U	1	
C2952	QEHR1EM-108Z	E.CAPACITOR 25V 1000U	1	
C2953	QFLC1HJ-103Z	P.CAPACITOR 50V 0.01U	1	
C2954	QEHR1CM-227Z	E.CAPACITOR 16V 110U	1	
C2955	QEHR2CM-335Z	E.CAPACITOR 160V 3.3U	1	
C2958	QTMN1EM-107Z	E.CAPACITOR 25V 100U	1	
⚠ CP2901	QMFZ034-100Z	FUSE	1	

Components identified with the mark ⚠ have special characteristics for safety.
When replacing any of these component, use only the same type.

Ref.No.	Part No.	Part Name & Description	Pcs	Remarks
⚠ CP2904	ICP-N75-Y	IC PROTECTOR	1	2.7A
D2402,03	RD33EB2	DIODE	2	
D2404	1SR35-400A	SI DIODE	1	
D2412	1SS133	DIODE	1	
D2501	1SS244	DIODE	1	
D2502,03	MTZJ12C	DIODE	2	
D2504	RL4Z	DIODE	1	
D2505-07	1SS133	DIODE	3	
⚠ D2508	RGP10J5025	DIODE	1	
D2509,10	MTZJ5.6B	DIODE	2	
D2511	1SS133	DIODE	1	
D2512	AG01Z	DIODE	1	
D2513	1SS244	DIODE	1	
D2514	AG01Z	DIODE	1	
D2515	MTZJ5.1B	DIODE	1	
D2516	1SS133	DIODE	1	
D2517	RK14	DIODE	1	
D2520	RU4DSF1	DIODE	1	
D2521	CTU-G3DR	DIODE	1	
D2522	RG2A2LFC4	DIODE	1	
D2523	1SS244	DIODE	1	
D2524,25	RG1C-LFA1	DIODE	2	
D2550,51	1SR35-400A	SI DIODE	2	
⚠ D2552	RGP10J5025	DIODE	1	
⚠ D2555	RGP10J5025	DIODE	1	
D2602	MTZJ5.1B	DIODE	1	
D2603	MTZJ27B	DIODE	1	
D2801	MTZJ11A	DIODE	1	
D2802	1SS133	DIODE	1	
⚠ D2901	RBV-406	DIODE	1	
D2902	RU2LFA1	DIODE	1	
D2903,04	AG01Z	DIODE	2	
D2908	RM2CLFA1	DIODE	1	
D2909	AG01	DIODE	1	
D2910	SF6L20U	DIODE	1	
D2911,12	RG2ALFC4	DIODE	2	
D2913	RU3YXLFC4	DIODE	1	
D2914,15	1SS133	DIODE	2	
D2916,17	MTZJ3.3A	DIODE	2	
D2918	1SS133	DIODE	1	
D2919,20	MTZJ12C	DIODE	2	
D2921-23	1SS133	DIODE	3	
D2925	S1WBA80-4101	BRIDGE DIODE	1	
D2950	RK44LFT4	DIODE	1	
D2951	MTZJ5.6B	DIODE	1	
D2952	1SS133	DIODE	1	
⚠ F2901	QMF51D2-6R3J	FUSE	1	
IC2401	AN5539-LF	IC	1	
IC2510	JLC1562BN	IC	1	
IC2601	UPC4556C	IC	1	C0AABB000012
IC2801	AN5265	IC	1	
⚠ IC2901	STR-F6658BF7	IC	1	
⚠ IC2902	QAL0256-001	IC	1	
IC2903	SE140N	IC	1	
IC2904	TA79012S	IC	1	
IC2905	BA12T	IC	1	
IC2906	BA05T	IC	1	
IC2907	SI8050S	IC	1	
IC2911	PQ30RV21	IC	1	
K2501	QQR0872-002	FERRITE BEADS	1	
K2502	QQR0872-001Y	FERRITE BEADS	1	
L2501	QQLZ020-801	COIL 800UH	1	
L2502,03	QQR0666-003	LINEARITY COIL	2	
L2504	QQLZ020-801	COIL 800UH	1	
L2505	QQL26AK-821Z	COIL 820UH	1	
L2551	QQLZ018-380	COIL 38UH	1	
L2553	QQL50AK-221Z	COIL 220UH	1	
L2801	QQL244K-4R7Z	COIL 4.7UH	1	
⚠ L2901	QQR0676-004	LINE FILTER	1	
⚠ L2902	QQR0646-002	CHOKE COIL	1	

Ref.No.	Part No.	Part Name & Description	Pcs	Remarks
L2904	QQL244K-100Z	COIL 10UH	1	
L2910	QQR0518-001	COIL	1	
L2911	QQL50AK-100Z	COIL 10UH	1	
⚠ PC2901	TLP721FD4-GR	PHOTO COUPLER	1	
⚠ PC2902	TLP759F/D4/	IC	1	
Q2401	2SC3311A	TRANSISTOR	1	2SC3311AW
Q2501	IRF9630	FET	1	
Q2502	2SC5570	TRANSISTOR	1	
Q2503	2SC3311A	TRANSISTOR	1	2SC3311AW
Q2504	2SA1309A-R	TRANSISTOR	1	
Q2505	2SC3311A	TRANSISTOR	1	2SC3311AW
Q2506	2SB946/P/	TRANSISTOR	1	
Q2507	IRFZ14	FET	1	
Q2508	2SC3311A	TRANSISTOR	1	2SC3311AW
Q2511	2SC3311A	TRANSISTOR	1	2SC3311AW
Q2512	DTC114ESA	TRANSISTOR	1	
Q2513	2SA1370/E/	TRANSISTOR	1	
Q2514	DTC124ESA	TRANSISTOR	1	
Q2550	2SK2459N-F54	FET	1	
Q2551	2SK2477	FET	1	
Q2601	2SC3311A	TRANSISTOR	1	2SC3311AW
Q2602	2SD1271A-P	TRANSISTOR	1	
Q2603	2SB861/C/	TRANSISTOR	1	or 2SB861W/C/
Q2604	2SC1505/MLK/	TRANSISTOR	1	
Q2605	2SK2043-CB14	TRANSISTOR	1	
Q2901,02	2SA1309A-R	TRANSISTOR	2	
Q2903,04	2SA1370/E/	TRANSISTOR	2	
Q2905	2SC3311A	TRANSISTOR	1	2SC3311AW
Q2906	2SA1309A-R	TRANSISTOR	1	
Q2910	2SC3311A	TRANSISTOR	1	2SC3311AW
Q2911	2SC2229/Y/	TRANSISTOR	1	
R2401	QRE141J-122Y	C.RESISTOR 1/4W 1.2K	1	
R2402,03	QRA14CF-2611	M.RESISTOR 1/4W 2.61K	2	
R2404	QRA14CF-2491	M.RESISTOR 1/4W 2.49K	1	
R2405	QRA14CF-3091	M.RESISTOR 1/4W 3.09K	1	
R2406	QRE141J-221Y	C.RESISTOR 1/4W 220	1	
R2407	QRE141J-0R0Y	M.RESISTOR 1/4W 0	1	
R2408	QRA14CF-3900	C.RESISTOR 1/4W 390	1	
R2409	QRE141J-103Y	C.RESISTOR 1/4W 10K	1	
R2410	QRX029J-1R5	M.RESISTOR 2W 1.5	1	
R2411	QRE121J-8R2Y	C.RESISTOR 1/2W 8.2	1	
R2412	QRE141J-102Y	C.RESISTOR 1/4W 1K	1	
R2413	QRE141J-101Y	C.RESISTOR 1/4W 100	1	
R2414	QRE141J-331Y	C.RESISTOR 1/4W 330	1	
R2419	QRG01GJ-331	M.RESISTOR 1W 330	1	
R2422	QRE141J-152Y	C.RESISTOR 1/4W 1.5K	1	
R2430	QRE141J-103Y	C.RESISTOR 1/4W 10K	1	
R2501	QRE141J-184Y	C.RESISTOR 1/4W 180K	1	
R2502	QRE141J-122Y	C.RESISTOR 1/4W 1.2K	1	
R2503	QRE141J-224Y	C.RESISTOR 1/4W 220	1	
R2504	QRA14CF-3302	M.RESISTOR 1/4W 33K	1	
⚠ R2505	QRA14CF-2202	M.RESISTOR 1/4W 22K	1	
⚠ R2508	QRA14CF-5601	C.RESISTOR 1/4W 5.6K	1	
R2509	QRE141J-103Y	C.RESISTOR 1/4W 10K	1	
R2510	QRE141J-223Y	C.RESISTOR 1/4W 22K	1	
R2511	QRE141J-103Y	C.RESISTOR 1/4W 10K	1	
R2512	QRE141J-101Y	C.RESISTOR 1/4W 100	1	
R2513	QRE141J-100Y	C.RESISTOR 1/4W 10	1	
R2514	QRE141J-473Y	C.RESISTOR 1/4W 47K	1	
R2515	QRE141J-222Y	C.RESISTOR 1/4W 2.2K	1	
R2516	QRG01GJ-470	M.RESISTOR 1W 47	1	
R2517	QRE141J-102Y	C.RESISTOR 1/4W 1K	1	
R2518	QRX01GJ-R68	M.RESISTOR 1/4W 0.68	1	
R2519	QRX039J-1R0	M.RESISTOR 3W 1	1	
R2520	QRG039J-100	M.RESISTOR 3W 10	1	
R2521	QRE121J-101Y	C.RESISTOR 1/2W 100	1	
R2522,23	QRE141J-470Y	C.RESISTOR 1/4W 47	2	
R2524	QRX029J-1R8	M.RESISTOR 2W 1.8	1	
R2525	QRE121J-124Y	C.RESISTOR 1/2W 120K	1	
R2526	QRE141J-153Y	C.RESISTOR 1/4W 15K	1	
R2527	QRE141J-102Y	C.RESISTOR 1/4W 1K	1	
R2528	QRE141J-103Y	C.RESISTOR 1/4W 10K	1	

Components identified with the mark ⚠ have special characteristics for safety.
When replacing any of these component, use only the same type.

Ref.No.	Part No.	Part Name & Description	Pcs	Remarks
R2529	QRE141J-0R0Y	M.RESISTOR 1/4W 0	1	
R2530	QRE121J-121Y	C.RESISTOR 1/2W 120	1	
R2531	QRE121J-471Y	C.RESISTOR 1/2W 470	1	
R2532,33	QRE141J-103Y	C.RESISTOR 1/4W 10K	2	
R2534	QRL029J-101	M.RESISTOR 1W 100	1	
R2535	QRE141J-152Y	C.RESISTOR 1/4W 1.5K	1	
R2536-38	QRE141J-153Y	C.RESISTOR 1/4W 15K	3	
R2539	QRE141J-471Y	C.RESISTOR 1/4W 470	1	
R2540,41	QRE141J-472Y	C.RESISTOR 1/4W 4.7K	2	
R2543-49	QRE141J-472Y	C.RESISTOR 1/4W 4.7K	7	
R2550	QRM059J-R15	M.RESISTOR 5W 0.15	1	
R2551	QRE121J-152Y	C.RESISTOR 1/2W 1.5K	1	
⚠ R2552	QRA14CF-2203	M.RESISTOR 1/4W 220K	1	
R2553	QRG029J-330	M.RESISTOR 2W 33	1	
R2555	QRE141J-393Y	C.RESISTOR 1/4W 39	1	
⚠ R2556	QRZ9017-2R2	F.RESISTOR 1/4W 2.2	1	
R2557	QRE121J-330Y	C.RESISTOR 1/2W 33	1	
R2558,59	QRE141J-102Y	C.RESISTOR 1/4W 1K	2	
R2561	QRE141J-103Y	C.RESISTOR 1/4W 10K	1	
R2562	QRE141J-332Y	C.RESISTOR 1/4W 3.3K	1	
R2563	QRE141J-272Y	C.RESISTOR 1/4W 2.7K	1	
R2564	QRE141J-103Y	C.RESISTOR 1/4W 10K	1	
R2566	QRE121J-471Y	C.RESISTOR 1/2W 470	1	
R2601	QRE141J-682Y	C.RESISTOR 1/4W 6.8K	1	
R2602	QRE141J-123Y	C.RESISTOR 1/4W 12K	1	
R2603	QRE141J-273Y	C.RESISTOR 1/4W 27K	1	
R2604	QRE141J-153Y	C.RESISTOR 1/4W 15K	1	
R2605	QRE121J-332Y	C.RESISTOR 1/2W 3.3K	1	
R2606,07	QRE141J-104Y	C.RESISTOR 1/4W 100K	2	
R2608	QRE141J-153Y	C.RESISTOR 1/4W 15K	1	
R2609	QRE141J-823Y	C.RESISTOR 1/4W 82K	1	
R2610	QRE141J-100Y	C.RESISTOR 1/4W 10	1	
R2611,12	QRE141J-104Y	C.RESISTOR 1/4W 100K	2	
R2613	QRE141J-821Y	C.RESISTOR 1/4W 820	1	
R2615	QRE141J-102Y	C.RESISTOR 1/4W 1K	1	
R2616	QRE141J-103Y	C.RESISTOR 1/4W 10K	1	
R2620	QRE121J-2R2Y	C.RESISTOR 1/2W 2.2K	1	
R2621	QRE141J-474Y	C.RESISTOR 1/4W 470K	1	
R2622	QRE141J-332Y	C.RESISTOR 1/4W 3.3K	1	
R2623	QRE121J-683Y	C.RESISTOR 1/2W 68K	1	
R2624	QRE141J-271Y	C.RESISTOR 1/4W 270	1	
R2801	QRE121J-181Y	C.RESISTOR 1/2W 180K	1	
R2802	QRE141J-562Y	C.RESISTOR 1/4W 5.6	1	
R2803	QRE141J-102Y	C.RESISTOR 1/4W 1K	1	
R2804	QRE141J-103Y	C.RESISTOR 1/4W 10K	1	
R2805	QRE141J-102Y	C.RESISTOR 1/4W 1K	1	
R2807	QRE141J-221Y	C.RESISTOR 1/4W 220	1	
R2808	QRE141J-223Y	C.RESISTOR 1/4W 22K	1	
R2809	QRE141J-100Y	C.RESISTOR 1/4W 10	1	
⚠ R2810	QRZ9021-8R2	F.RESISTOR 1W 8.2	1	
R2901	QRG039J-683	M.RESISTOR 3W 68	1	
R2902,03	QRM059J-R15	M.RESISTOR 5W 0.15	2	
⚠ R2904	QRK126J-681X	C.RESISTOR 1/4W 680	1	
R2905	QRE141J-332Y	C.RESISTOR 1/4W 3.3K	1	
R2906	QRE141J-472Y	C.RESISTOR 1/4W 4.7K	1	
R2907	QRE141J-332Y	C.RESISTOR 1/4W 3.3K	1	
R2910	QRL029J-683	M.RESISTOR 2W 68K	1	
R2911	QRE121J-220Y	C.RESISTOR 1/2W 22	1	
R2920	QRE141J-3R3Y	C.RESISTOR 1/4W 3.3	1	
R2921	QRE141J-103Y	C.RESISTOR 1/4W 10K	1	
R2922	QRE141J-392Y	C.RESISTOR 1/4W 3.9K	1	
R2923	QRE141J-102Y	C.RESISTOR 1/4W 1K	1	
R2924	QRE141J-122Y	C.RESISTOR 1/4W 1.2K	1	
R2925,26	QRE141J-5R6Y	C.RESISTOR 1/4W 5.6	2	
R2927	QRE141J-120Y	C.RESISTOR 1/4W 12	1	
R2929,30	QRE141J-1R5Y	C.RESISTOR 1/4W 1.5	2	
R2931	QRE141J-683Y	C.RESISTOR 1/4W 68K	1	
R2932,33	QRE141J-103Y	C.RESISTOR 1/4W 10K	2	
R2934	QRE141J-683Y	C.RESISTOR 1/4W 68K	1	
R2935	QRE141J-223Y	C.RESISTOR 1/4W 22K	1	
R2936,37	QRE141J-103Y	C.RESISTOR 1/4W 10K	2	
R2938	QRE141J-222Y	C.RESISTOR 1/4W 2.2K	1	
R2939	QRE141J-152Y	C.RESISTOR 1/4W 1.5K	1	
R2940	QRE141J-1R5Y	C.RESISTOR 1/4W 1.5	1	
⚠ R2941	QRA14CF-1501	C.RESISTOR 1/4W 1.5K	1	

Ref.No.	Part No.	Part Name & Description	Pcs	Remarks
⚠ R2942	QRA14CF-3900	C.RESISTOR 1/4W 390	1	
R2943	QRE141J-470Y	C.RESISTOR 1/4W 47	1	
R2944	QRE141J-102Y	C.RESISTOR 1/4W 1K	1	
R2945	QRE141J-222Y	C.RESISTOR 1/4W 2.2K	1	
R2946	QRE141J-1R5Y	C.RESISTOR 1/4W 1.5	1	
R2947	QRE141J-3R3Y	C.RESISTOR 1/4W 3.3	1	
R2948	QRE141J-102Y	C.RESISTOR 1/4W 1K	1	
R2949	QRE121J-152Y	C.RESISTOR 1/2W 1.5K	1	
R2970	QRE141J-821Y	C.RESISTOR 1/4W 820	1	
R2971	QRE141J-472Y	C.RESISTOR 1/4W 4.7K	1	
R2972	QRE141J-153Y	C.RESISTOR 1/4W 15K	1	
R2973	QRE141J-103Y	C.RESISTOR 1/4W 10K	1	
R2974	QRE141J-473Y	C.RESISTOR 1/4W 47K	1	
R2975	QRL039J-562	M.RESISTOR 3W 5.6K	1	
R2976-78	QRE121J-271Y	C.RESISTOR 1/2W 270	3	
R2979	QRE121J-271	C.RESISTOR 1/2W 270	1	
⚠ RY2901,02	QSK0119-001	RELAY	2	
SG2501	CE42447-242	ARRESTOR	1	
T2501	QQR0663-001	DRIVE TRANSFORMER	1	
⚠ T2502	QQS0153-001	TRANSFORMER	1	
T2601	CE42710-001	TRANSFORMER	1	
⚠ T2901	QQS0091-001	TRANSFORMER	1	
⚠ TH2901	QAD0137-4R5	THERMISTOR	1	4.5
TP2001,02	CM42818-001	TEST POINT	2	
⚠ Z2901	ERZV10V621CS	ZNR	1	
		MISCELLANEOUS		
	CE41667-003	RADIATION SHEET	1	
	CEMG002-001Z	FUSE CLIP	2	
■	FX-2120A	S.CORRECTION P.C.BOARD	1	(RTL)
C2501	QFZ0197-335	P.CAPACITOR 1.5KV 3.3U	1	
C2502	QFZ0197-105	P.CAPACITOR 1.5KV 1UF	1	
C2504	QFZ0197-824	P.CAPACITOR 1.5KV 0.82U	1	
C2505	QFZ0197-754	P.CAPACITOR 1.5KV 0.75U	1	
C2506,07	QFLC1HJ-473Z	P.CAPACITOR 50V 0.047U	2	
C2508	QFLC1HJ-153Z	P.CAPACITOR 50V 0.015U	1	
C2511,12	QEHR1CM-107Z	E.CAPACITOR 16V 100U	2	
C2513,14	QTNC1CM-476Z	E.CAPACITOR 16V 47U	2	
C2515	QFLC1HJ-104Z	P.CAPACITOR 50V 100U	1	
C2516,17	QTNC1CM-476Z	E.CAPACITOR 16V 47U	2	
C2518,19	QFLC1HJ-104Z	P.CAPACITOR 50V 100U	2	
D2501	1SS133	DIODE	1	
D2502	1SS244	DIODE	1	
D2503	RG2A2LFC4	DIODE	1	
D2520-25	1SS133	DIODE	6	
IC2501	LA6515	IC	1	
IC2502	BA15218N	IC	1	
L2501	QQR0666-001	LINEARITY COIL	1	
L2502	QQR0664-002	COIL	1	
Q2501-04	IRF640	FET	4	
Q2507-09	2SC3311A	TRANSISTOR	3	2SC3311AW
Q2511,12	2SC3311A	TRANSISTOR	2	2SC3311AW
Q2515,16	IRF640	FET	2	
R2501-03	QRE141J-102Y	C.RESISTOR 1/4W 1K	3	
R2504	QRE141J-473Y	C.RESISTOR 1/4W 47K	1	
⚠ R2505	QRA14CF-9312	M.RESISTOR 1/4W 93.1K	1	

Components identified with the mark ⚠ have special characteristics for safety.
When replacing any of these component, use only the same type.

Ref.No.	Part No.	Part Name & Description	Pcs	Remarks
R2506-08	QRE141J-272Y	C.RESISTOR 1/4W 2.7K	3	
R2510	QRE141J-272Y	C.RESISTOR 1/4W 2.7K	1	
R2511	QRE141J-183Y	C.RESISTOR 1/4W 18	1	
R2512	QRZ0121-561	M.RESISTOR 1/2W 560	1	
⚠ R2513	QRA14CF-2202	M.RESISTOR 1/4W 22K	1	
R2514	QRL029J-101	M.RESISTOR 1W 100	1	
R2515	QRL029J-470	M.RESISTOR 2W 47	1	
R2516	QRE141J-472Y	C.RESISTOR 1/4W 4.7K	1	
R2517	QRE141J-473Y	C.RESISTOR 1/4W 47K	1	
R2518	QRE141J-273Y	C.RESISTOR 1/4W 27K	1	
R2519	QRE141J-102Y	C.RESISTOR 1/4W 1K	1	
R2520	QRE141J-182Y	C.RESISTOR 1/4W 1.8K	1	
R2521	QRE141J-682Y	C.RESISTOR 1/4W 6.8K	1	
R2524	QRG01GJ-560	M.RESISTOR 1W 56	1	
R2525	QRE141J-681Y	C.RESISTOR 1/4W 680	1	
R2526-29	QRE141J-821Y	C.RESISTOR 1/4W 820	4	
R2530,31	QRG01GJ-391	M.RESISTOR 1W 390	2	
⚠ RY2501	CESK028-001	RELAY	1	
S2501	QSL4A13-C03Z	LEVER SWITCH	1	H.CENT
TP-G	CM42818-001	TEST POINT	1	
TP-XR	CM42818-001	TEST POINT	1	
VR2501	QVP0086-502Z	V.RESISTOR 5K	1	X.RAY
VR2502	QVP0086-503Z	V.RESISTOR 50K	1	H.VOLTAGE
VR2504,05	QVP0086-103Z	V.RESISTOR 10K	2	CONV_L
■	FX-3074A	CRT SOCKET P.C.BOARD	1	(RTL)
C3001	QEHQ1EM-228	E.CAPACITOR 25V 2200U	1	
C3002	NCB21HK-103X	C.CAPACITOR 50V 0.01U	1	
C3003	QEZ0368-227	E.CAPACITOR 220U	1	
C3004	NDC21HJ-471X	C.CAPACITOR 50V 470P	1	
C3005	QFP32GK-563	P.CAPACITOR 400V 0.056U	1	
C3006	NCB21HK-103X	C.CAPACITOR 50V 0.01U	1	
C3007	QFM72DJ-152Z	M.CAPACITOR 200V 1500P	1	
C3008	QCZ0324-102	C.CAPACITOR 1000P	1	
C3009	QEHR1CM-107Z	E.CAPACITOR 16V 100U	1	
C3010	QEHQ2EM-336	E.CAPACITOR 250V 33U	1	
C3011	QEZ0368-227	E.CAPACITOR 220U	1	
C3012	QEHR1CM-107Z	E.CAPACITOR 16V 100U	1	
C3013	QFV71HJ-154Z	P.CAPACITOR 50V 0.15U	1	
C3101	NDC21HJ-391X	C.CAPACITOR 50V 390P	1	
C3102	NDC21HJ-820X	C.CAPACITOR 50V 82P	1	
C3103	NCB21HK-103X	C.CAPACITOR 50V 0.01U	1	
C3201	NDC21HJ-331X	C.CAPACITOR 50V 330P	1	
C3202	NDC21HJ-101X	C.CAPACITOR 50V 100P	1	
C3203	NCB21HK-103X	C.CAPACITOR 50V 0.01U	1	
C3301	NDC21HJ-391X	C.CAPACITOR 50V 390P	1	
C3302	NDC21HJ-151X	C.CAPACITOR 50V 150P	1	
C3303	NCB21HK-103X	C.CAPACITOR 50V 0.01U	1	
D3001,02	MA111	DIODE	2	
D3003	1SS82	DIODE	1	
D3004,05	1SR124-400A	DIODE	2	
D3006	MA111	DIODE	1	
D3007	MA3051-M	DIODE	1	
D3008	RU2	DIODE	1	B0HAMR000050
D3009	1SS82	DIODE	1	
D3010,11	MA111	DIODE	2	
D3013	MA111	DIODE	1	
D3014	MA3110-M	DIODE	1	
D3015-17	MA111	DIODE	3	
D3018	MA3024-X	Z DIODE	1	
D3101-07	MA111	DIODE	7	
D3201-07	MA111	DIODE	7	
D3301-07	MA111	DIODE	7	

Ref.No.	Part No.	Part Name & Description	Pcs	Remarks
L3001	QQL01BK-102Z	COIL 1000UH	1	
L3002	QQL50AK-330Z	COIL 33UH	1	
L3102	QQL01BK-2R2Z	COIL 2.2UH	1	
L3202	QQL01BK-1R8Z	COIL 1.8UH	1	
L3302	QQL01BK-2R2Z	COIL 2.2UH	1	
Q3001	2SC1505/MLK/	TRANSISTOR	1	
Q3002	2SA965/0Y/	TRANSISTOR	1	
Q3003	2SC2235/0Y/	TRANSISTOR	1	
Q3004	2SC2229/Y/	TRANSISTOR	1	
Q3007	2SC2412K	TRANSISTOR	1	
Q3008	2SA1037AK/QR	TRANSISTOR	1	
Q3009,10	2SC2412K	TRANSISTOR	2	
Q3011	2SC2229/Y/	TRANSISTOR	1	
Q3012	2SC2412K	TRANSISTOR	1	
Q3013	2SA1037AK/QR	TRANSISTOR	1	
Q3101	2SC3950/CDE/	POW TRANSISTOR	1	
Q3102	2SC4474/D/	POW TRANSISTOR	1	
Q3103	2SC3955/D/	POW TRANSISTOR	1	
Q3104	2SA1540/D/	POW TRANSISTOR	1	
Q3105	2SC3334	TRANSISTOR	1	
Q3106	2SA1321	TRANSISTOR	1	
Q3201	2SC3950/CDE/	POW TRANSISTOR	1	
Q3202	2SC4474/D/	POW TRANSISTOR	1	
Q3203	2SC3955/D/	POW TRANSISTOR	1	
Q3204	2SA1540/D/	POW TRANSISTOR	1	
Q3205	2SC3334	TRANSISTOR	1	
Q3206	2SA1321	TRANSISTOR	1	
Q3301	2SC3950/CDE/	POW TRANSISTOR	1	
Q3302	2SC4474/D/	POW TRANSISTOR	1	
Q3303	2SC3955/D/	POW TRANSISTOR	1	
Q3304	2SA1540/D/	POW TRANSISTOR	1	
Q3305	2SC3334	TRANSISTOR	1	
Q3306	2SA1321	TRANSISTOR	1	
R3001	NRSA02J-103X	M.RESISTOR 1/10W 10K	1	
R3002	NRSA02J-332X	M.RESISTOR 1/10W 3.3K	1	
R3003	NRSA02J-103X	M.RESISTOR 1/10W 10K	1	
R3004	NRSA02J-680X	M.RESISTOR 1/10W 68	1	
R3005	QRL029J-152	M.RESISTOR 2W 1.5K	1	
R3006	QRL029J-182	M.RESISTOR 2W 1.8K	1	
R3007	QRK126J-474X	C.RESISTOR 1/2W 470K	1	
⚠ R3008	QRZ9017-471	F.RESISTOR 1/4W 470	1	
R3009	QRK126J-223X	C.RESISTOR 1/2W 22K	1	
R3011	NRSA02J-103X	M.RESISTOR 1/10W 10K	1	
R3012	QRK126J-152X	C.RESISTOR 1/2W 1.5K	1	
⚠ R3013,14	QRZ9011-100	F.RESISTOR 10	2	
R3015	QRC121K-473Z	C.RESISTOR 1/2W 47K	1	
R3017	NRSA02J-273X	M.RESISTOR 1/10W 27K	1	
R3018	NRSA02J-223X	M.RESISTOR 1/10W 22K	1	
⚠ R3021	QRK126J-102X	C.RESISTOR 1/2W 1K	1	
R3022	NRSA02J-122X	M.RESISTOR 1/10W 1.2K	1	
R3023	NRSA02J-103X	M.RESISTOR 1/10W 10K	1	
R3024	NRSA02J-332X	M.RESISTOR 1/10W 3.3K	1	
R3025	NRSA02J-103X	M.RESISTOR 1/10W 10K	1	
R3026	NRSA02J-152X	M.RESISTOR 1/10W 1.5K	1	
R3027	NRSA02J-153X	M.RESISTOR 1/10W 15K	1	
R3028	NRSA02J-152X	M.RESISTOR 1/10W 1.5K	1	
R3029	QRK126J-473X	C.RESISTOR 1/2W 47K	1	
R3031	NRSA02J-472X	M.RESISTOR 1/10W 4.7K	1	
R3033	QRK126J-104X	C.RESISTOR 1/2W 100K	1	
R3034,35	NRSA02J-152X	M.RESISTOR 1/10W 1.5K	2	
R3036,37	NRSA02J-103X	M.RESISTOR 1/10W 10K	2	
R3038	NRSA02J-472X	M.RESISTOR 1/10W 4.7K	1	
R3039	NRSA02J-0R0X	M.RESISTOR 1/10W 0	1	
R3040	NRSA02J-182X	M.RESISTOR 1/10W 1.8K	1	
R3101	NRSA02J-470X	M.RESISTOR 1/10W 47	1	
R3102,03	NRSA02J-121X	M.RESISTOR 1/10W 120	2	
R3104	NRSA02J-390X	M.RESISTOR 1/10W 39	1	
R3105	NRSA02J-470X	M.RESISTOR 1/10W 47	1	
R3106,07	QRL039J-472	M.RESISTOR 3W 4.7K	2	
⚠ R3108,09	QRZ9017-150	F.RESISTOR 1/4W 15	2	
⚠ R3110	QRZ9017-471	F.RESISTOR 1/4W 470	1	
R3111	NRSA02J-392X	M.RESISTOR 1/10W 3.9K	1	
R3112	NRSA02J-332X	M.RESISTOR 1/10W 3.3K	1	

Components identified with the mark ⚠ have special characteristics for safety.
When replacing any of these component, use only the same type.

Ref.No.	Part No.	Part Name & Description	Pcs	Remarks
R3115	NRSA02J-0R0X	M.RESISTOR 1/10W 0	1	
R3116	NRSA02J-182X	M.RESISTOR 1/10W 1.8K	1	
R3117	QRC121K-101Z	C.RESISTOR 1/2W 100	1	
R3201	NRSA02J-470X	M.RESISTOR 1/10W 47	1	
R3202,03	NRSA02J-121X	M.RESISTOR 1/10W 120	2	
R3204,05	NRSA02J-470X	M.RESISTOR 1/10W 47	2	
R3206,07	QRL039J-472	M.RESISTOR 3W 4.7K	2	
⚠ R3208,09	QRZ9017-150	F.RESISTOR 1/4W 15	2	
⚠ R3210	QRZ9017-471	F.RESISTOR 1/4W 470	1	
R3211	NRSA02J-392X	M.RESISTOR 1/10W 3.9K	1	
R3212	NRSA02J-332X	M.RESISTOR 1/10W 3.3K	1	
R3215	NRSA02J-0R0X	M.RESISTOR 1/10W 0	1	
R3217	QRC121K-101Z	C.RESISTOR 1/2W 100	1	
R3301	NRSA02J-470X	M.RESISTOR 1/10W 47	1	
R3302,03	NRSA02J-121X	M.RESISTOR 1/10W 120	2	
R3304	NRSA02J-390X	M.RESISTOR 1/10W 39	1	
R3305	NRSA02J-470X	M.RESISTOR 1/10W 47	1	
R3306,07	QRL039J-472	M.RESISTOR 3W 4.7K	2	
⚠ R3308,09	QRZ9017-150	F.RESISTOR 1/4W 15	2	
⚠ R3310	QRZ9017-471	F.RESISTOR 1/4W 470	1	
R3311	NRSA02J-392X	M.RESISTOR 1/10W 3.9K	1	
R3312	NRSA02J-332X	M.RESISTOR 1/10W 3.3K	1	
R3315	NRSA02J-0R0X	M.RESISTOR 1/10W 0	1	
R3316	NRSA02J-182X	M.RESISTOR 1/10W 1.8K	1	
R3317	QRC121K-101Z	C.RESISTOR 1/2W 100	1	
SG3001	CE42447-242	ARRESTOR	1	
SG3101	QAF0006-201	SURGE ABSORBER 200V	1	
SG3201	QAF0006-201	SURGE ABSORBER 200V	1	
SG3301	QAF0006-201	SURGE ABSORBER 200V	1	
⚠ SK3001	CE42670-002	CRT SOCKET	1	
■	FX-4089A	FRONT CONTROL P.C.BOARD	1	(RTL)
D4101	MA111	DIODE	1	
C4101	NEH71CM-476X	E.CAPACITOR 16V 47U	1	
D4102	MA111	DIODE	1	
C4102	NCF21HZ-103X	C.CAPACITOR 50V 0.01U	1	
D4103-19	MA111	DIODE	17	
D4120	GL3ED8	DIODE	1	B3AGA0000029 POWER
IC4101	JLC1562BF	IC	1	
Q4101	2SA1037AK/QR	TRANSISTOR	1	
Q4102-05	2SC2412K	TRANSISTOR	4	
Q4106-11	2SA1037AK/QR	TRANSISTOR	6	
Q4112-14	2SC2412K	TRANSISTOR	3	
Q4120	2SC2412K	TRANSISTOR	1	
R4101	NRSA02J-391X	M.RESISTOR 1/10W 390	1	
R4102	NRSA02J-470X	M.RESISTOR 1/10W 47	1	
R4103	NRSA02J-391X	M.RESISTOR 1/10W 390	1	
R4104	NRSA02J-103X	M.RESISTOR 1/10W 10K	1	
R4105	NRSA02J-391X	M.RESISTOR 1/10W 390	1	
R4106	NRSA02J-103X	M.RESISTOR 1/10W 10K	1	
R4107	NRSA02J-391X	M.RESISTOR 1/10W 390	1	
R4108	NRSA02J-103X	M.RESISTOR 1/10W 10K	1	
R4109	NRSA02J-391X	M.RESISTOR 1/10W 390	1	
R4110	NRSA02J-103X	M.RESISTOR 1/10W 10K	1	
R4111	NRSA02J-391X	M.RESISTOR 1/10W 390	1	
R4112	NRSA02J-103X	M.RESISTOR 1/10W 10K	1	
R4113	NRSA02J-391X	M.RESISTOR 1/10W 390	1	
R4114	NRSA02J-103X	M.RESISTOR 1/10W 10K	1	
R4119	NRSA02J-391X	M.RESISTOR 1/10W 390	1	
R4120	NRSA02J-103X	M.RESISTOR 1/10W 10K	1	
R4121	NRSA02J-391X	M.RESISTOR 1/10W 390	1	
R4122	NRSA02J-103X	M.RESISTOR 1/10W 10K	1	
R4123	NRSA02J-391X	M.RESISTOR 1/10W 390	1	
R4124	NRSA02J-103X	M.RESISTOR 1/10W 10K	1	

Ref.No.	Part No.	Part Name & Description	Pcs	Remarks
R4125	NRSA02J-391X	M.RESISTOR 1/10W 390	1	
R4126	NRSA02J-103X	M.RESISTOR 1/10W 10K	1	
R4127	NRSA02J-391X	M.RESISTOR 1/10W 390	1	
R4128	NRSA02J-103X	M.RESISTOR 1/10W 10K	1	
R4129	NRSA02J-391X	M.RESISTOR 1/10W 390	1	
R4130	NRSA02J-103X	M.RESISTOR 1/10W 10K	1	
R4131	NRSA02J-391X	M.RESISTOR 1/10W 390	1	
R4132-42	NRSA02J-103X	M.RESISTOR 1/10W 10K	11	
R4150	NRSA02J-123X	M.RESISTOR 1/10W 12K	1	
R4151,52	NRSA02J-102X	M.RESISTOR 1/10W 1K	2	
S4101	QSW0619-003Z	SWITCH	1	POWER
S4102-11	QSW0889-001	SWITCH	10	INPUT A
S4112	QSW0619-003Z	SWITCH	1	VOL-
S4113-15	QSW0889-001	SWITCH	3	ASPECT
S4116-19	QSW0619-003Z	SWITCH	4	MENU
		MISCELLANEOUS		
	LC40656-001A	LED SPACER (2)	1	
■	FX-5028A	FRONT VR P.C.BOARD	1	(RTL)
C5101	QETN1CM-107Z	E.CAPACITOR 16V 100U	1	
C5102	NCF21HZ-103X	C.CAPACITOR 50V 0.01U	1	
D5101-04	MA3056-M	DIODE	4	
R5101-04	NRSA02J-333X	M.RESISTOR 1/10W 33K	4	
VR5101-04	QVQ0286-B14	V.RESISTOR 10K	4	PHASE
■	FX-6142A	MOTHER P.C.BOARD	1	(RTL)
C6101	QEHR1CM-107Z	E.CAPACITOR 16V 100U	1	
C6102	NCF21HZ-103X	C.CAPACITOR 50V 0.01U	1	
C6103	QEHR1CM-107Z	E.CAPACITOR 16V 100U	1	
C6104	NCF21HZ-103X	C.CAPACITOR 50V 0.01U	1	
C6105-18	QEHR1VM-476Z	E.CAPACITOR 35V 47U	14	
C6119	QEHR1CM-107Z	E.CAPACITOR 16V 100U	1	
C6120	NCF21HZ-103X	C.CAPACITOR 50V 0.01U	1	
C6121-26	QEHR1HM-106Z	E.CAPACITOR 50V 10U	6	
C6127	QEHR1VM-476Z	E.CAPACITOR 35V 47U	1	
C6128-33	QEHR1HM-106Z	E.CAPACITOR 50V 10U	6	
C6137	QEHR1CM-107Z	E.CAPACITOR 16V 100U	1	
C6138	NCF21HZ-103X	C.CAPACITOR 50V 0.01U	1	
C6139-43	QEHR1VM-476Z	E.CAPACITOR 35V 47U	5	
C6145-47	NDC21HJ-100X	C.CAPACITOR 50V 10P	3	
C6201	QEHR1VM-476Z	E.CAPACITOR 35V 47U	1	
C6202	NCF21HZ-104X	C.CAPACITOR 50V 0.1U	1	
C6203	QEHQ1EM-228	E.CAPACITOR 25V 2200U	1	
C6204	QEHR1VM-476Z	E.CAPACITOR 35V 47U	1	
C6205	NCF21HZ-104X	C.CAPACITOR 50V 0.1U	1	
C6206	QEHR1CM-107Z	E.CAPACITOR 16V 100U	1	
C6207,08	NCF21HZ-224X	C.CAPACITOR 50V 0.22U	2	
IC6101,02	TC4052BF	IC	2	
IC6103	JLC1562BF	IC	1	
IC6104,05	M52055FP	IC	2	C1AB00000734
IC6106-09	NJM2234MA	IC	4	C1AB00000400
IC6110	TC4052BF	IC	1	
IC6111	M52055FP	IC	1	C1AB00000734
IC6201	BA12FP	IC	1	
IC6202	BA05FP	IC	1	

Components identified with the mark ⚠ have special characteristics for safety.
When replacing any of these component, use only the same type.

Ref.No.	Part No.	Part Name & Description	Pcs	Remarks
Q6101-03	2SC2412K	TRANSISTOR	3	
R6101-09	NRSA02J-223X	M.RESISTOR 1/10W 22K	9	
R6113	NRSA02J-103X	M.RESISTOR 1/10W 10K	1	
R6117	NRSA02J-103X	M.RESISTOR 1/10W 10K	1	
R6118	NRSA02J-183X	M.RESISTOR 1/10W 18K	1	
R6119	NRSA02J-333X	M.RESISTOR 1/10W 33K	1	
R6120	NRSA02J-102X	M.RESISTOR 1/10W 1K	1	
R6121	NRSA02J-183X	M.RESISTOR 1/10W 18K	1	
R6122	NRSA02J-333X	M.RESISTOR 1/10W 33K	1	
R6123	NRSA02J-332X	M.RESISTOR 1/10W 3.3K	1	
R6124	NRSA02J-183X	M.RESISTOR 1/10W 18K	1	
R6125	NRSA02J-333X	M.RESISTOR 1/10W 33K	1	
R6126	NRSA02J-332X	M.RESISTOR 1/10W 3.3K	1	
R6133	NRSA02J-103X	M.RESISTOR 1/10W 10K	1	
R6150-67	NRSA02J-103X	M.RESISTOR 1/10W 10K	18	
R6168-72	NRSA02J-0R0X	M.RESISTOR 1/10W 0	5	
■	FX-7055A	LED P.C.BOARD	1	(RTL)
D7101	SEC1601C-X	LED	1	TALLY lamp RED
D7102	SECU1D01C-X	LED	1	TALLY lamp GREEN
D7103	SEC1601C-X	LED	1	TALLY lamp RED
D7104	SECU1D01C-X	LED	1	TALLY lamp GREEN
D7105	SEC1601C-X	LED	1	TALLY lamp RED
D7106	SECU1D01C-X	LED	1	TALLY lamp GREEN
R7101	NRS144J-391X	M.RESISTOR 1/4W 390	1	
R7102	NRSA02J-122X	M.RESISTOR 1/10W 1.2K	1	
R7103	NRS144J-391X	M.RESISTOR 1/4W 390	1	
R7104	NRSA02J-122X	M.RESISTOR 1/10W 1.2K	1	
R7105	NRS144J-391X	M.RESISTOR 1/4W 390	1	
R7106	NRSA02J-122X	M.RESISTOR 1/10W 1.2K	1	
■	FX-8030A	REMOTE P.C.BOARD	1	(RTL)
C8101,02	NEH71HM-105X	E.CAPACITOR 50V 1U	2	
C8103	NEH70JM-107X	E.CAPACITOR 6.3V 100U	1	
C8104	NCF21HZ-103X	C.CAPACITOR 50V 0.01U	1	
C8105,06	NEH71HM-105X	E.CAPACITOR 50V 1U	2	
D8101-16	MA3120-M	DIODE	16	
D8117-44	MA111	DIODE	28	
IC8101	ADM237LJR-X	IC	1	
IC8102,03	JLC1562BF	IC	2	
J8101	QNZ0060-001	CONNECTOR	1	RS232C INPUT
J8102	QNZ0061-001	CONNECTOR	1	MAKE INPUT
R8101-08	NRSA02J-151X	M.RESISTOR 1/10W 150	8	
R8109-12	NRZ0040-101X	COMBI.R-R 100	4	
R8123-40	NRSA02J-103X	M.RESISTOR 1/10W 10K	18	
R8141	NRSA02J-0R0X	M.RESISTOR 1/10W 0	1	

SECTION 1

DISASSEMBLY

CONTENTS

1.1 DISASSEMBLY PROCEDURE DIS-1
1.1.1 REMOVING THE SLOT PANEL, TOP COVER AND REAR PANEL DIS-1
1.1.2 REMOVING THE BOTTOM COVER DIS-1
1.1.3 REMOVING THE SIGNAL PW BOARD, MOTHER PW BOARD AND REMOTE PW BOARD DIS-1
1.1.4 REMOVING THE CHASSIS BASE, SPEAKER AND S. CORRECTION PW BOARD DIS-1
1.1.5 REMOVING THE CRT AND LED PW BOARD DIS-1
1.1.6 REMOVING THE FRONT CONTROL PW BOARD AND FRONT VR PW BOARD DIS-1
1.1.7 DIAGNOSING THE MAIN PW BOARD DIS-1
1.1.8 NOTE CONCERNING WIRE CLAMPING DIS-1
1.2 DEMAGNETIZATION PROCEDURE DIS-3
1.2.1 CAUTION DIS-3
1.2.2 DEMAGNETIZING THE CRT SCREEN DIS-4
1.2.3 DEMAGNETIZING THE OUTER CABINET OF THE UNIT DIS-4
1.3 MEMORY IC REPLACEMENT DIS-5
1.3.1 MEMORY IC DIS-5
1.3.2 MEMORY IC REPLACEMENT PRECDURE DIS-5
1.3.3 FACTORY SETTING VALUE DIS-6
1.4 REPLACEMENT OF CHIP COMPONENT DIS-8
1.4.1 CAUTIONS DIS-8
1.4.2 SOLDERING IRON DIS-8
1.4.3 REPLACEMENT STEPS DIS-8

DISASSEMBLY

1.1 DISASSEMBLY PROCEDURE

CAUTION :

- Some parts are active even after the main power switch is set to OFF.
- Be sure to unplug the power cord from the power outlet before proceeding with disassembly or assembly of the unit.

1.1.1 REMOVING THE SLOT PANEL, TOP COVER AND REAR PANEL

(1) Unplug the power cord, remove the six screws **[1]** and remove the SLOT PANEL.
(2) Remove the fourteen screws **[2]** and then the two screws **[3]**.
(3) Open up the lower part of the TOP COVER slightly. Then pull the TOP COVER toward the rear and lift to remove it.
(4) Also remove the REAR PANEL.

1.1.2 REMOVING THE BOTTOM COVER

- Remove the SLOT PANEL, TOP COVER and REAR PANEL.
  (1) Place the unit so that the side with the SLOT CHASSIS comes at the bottom.
  (2) Remove the six screws **[4]** and pull the BOTTOM COVER toward the rear to remove it.

1.1.3 REMOVING THE SIGNAL PW BOARD, MOTHER PW BOARD AND REMOTE PW BOARD

- Remove the SLOT PANEL, TOP COVER and REAR PANEL.
  (1) Disconnect the wire clamps and connectors as required.
  (2) Remove the four screws **[5]** and unplug the SIGNAL PWB from the connector on the MOTHER PWB.
  (3) Remove the two screws **[6]** and then remove the Joint Bracket.
  (4) Remove the two screws **[7]** and then remove the SLOT CHASSIS by lifting it while pushing the claw **[C]** on the CHASSIS BASE.
  (5) Remove the nine screws **[8]** and remove the MOTHER PWB.
  (6) Remove the screw **[9]**, the four screwnuts **[10]** and the two screwnuts **[11]**, then remove the REMOTE PWB.

1.1.4 REMOVING THE CHASSIS BASE, SPEAKER AND S. CORRECTION PW BOARD

- Remove the SLOT PANEL, TOP COVER, REAR PANEL and SLOT CHASSIS.
  (1) Disconnect the wire clamps and connectors as required.
  (2) Remove the two screws **[12]** and pull the CHASSIS BASE toward the front to remove it.
  (3) While disengaging the claw **[D]** on the CHASSIS BASE that is engaged with the rear of the SPEAKER, lift the SPEAKER to remove it (see Fig. 2).
  (4) Remove the three screws **[13]** and then remove the PB BRACKET.
  (5) Unplug the S. CORRECTION PWB from the connector on the MAIN PWB.

1.1.5 REMOVING THE CRT AND LED PW BOARD

- Remove the SLOT PANEL, TOP COVER, REAR PANEL, BOTTOM COVER, SLOT CHASSIS and CHASSIS BASE.
  (1) Remove the four screws **[14]** and remove the SIDE BRACKETS.
  (2) Also remove the CRT.
  (3) Remove the two screws **[15]** and remove the LED PWB.

1.1.6 REMOVING THE FRONT CONTROL PW BOARD AND FRONT VR PW BOARD

(1) Remove the five screws **[16]** and remove the CONTROL BASE.
(2) Disconnect the connectors as required.
(3) Remove the three screws **[17]** and remove the FRONT CONTROL PWB.
(4) While slightly lifting the two claws **[E]** on the CONTROL BASE, remove the FRONT VR PWB.

1.1.7 DIAGNOSING THE MAIN PW BOARD

- Remove the SLOT PANEL, TOP COVER and REAR PANEL.
  (1) Place the unit so that the side with the SLOT CHASSIS comes at the bottom, and remove the BOTTOM COVER.
  (2) Now the diagnosis of the MAIN PWB is possible.

CAUTION :

- **The unit is unstable when it is placed on its side so please be careful that it does not topple over during work.**
- **Before turning the power on, ensure that the connectors in cluding the CRT grounding are connected properly.**

CAUTION

Before turning the power on, ensure that the spiral wires (Yellow/Green) and the CRT grounding wires are connected properly.

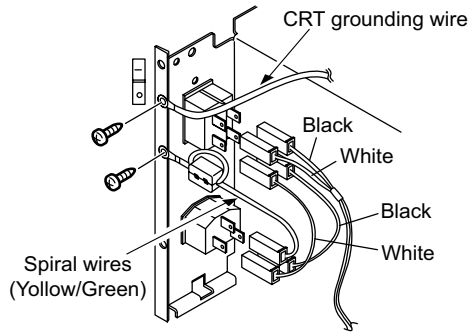

View from the rear of the AC inlet

1.1.8 NOTE CONCERNING WIRE CLAMPING

- Be sure to reconnect the wire clamps that have been disconnected during the above work.

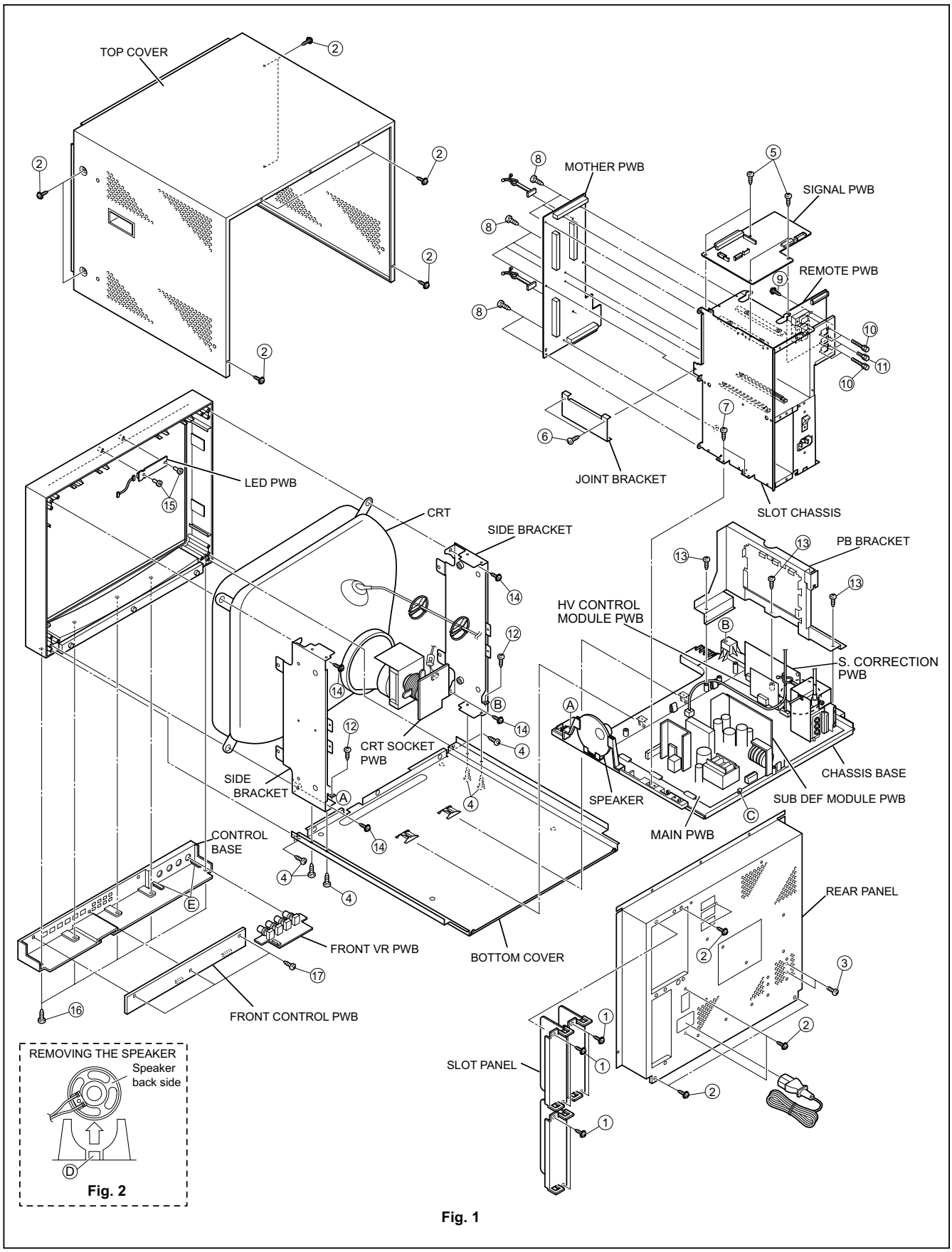
TOP COVER
MOTHER PWB
SIGNAL PWB
REMOTE PWB
JOINT BRACKET
SLOT CHASSIS
LED PWB
CRT
SIDE BRACKET
PB BRACKET
HV CONTROL MODULE PWB
S. CORRECTION PWB
CRT SOCKET PWB
SIDE BRACKET
CHASSIS BASE
SPEAKER
SUB DEF MODULE PWB
MAIN PWB
CONTROL BASE
REAR PANEL
FRONT VR PWB
BOTTOM COVER
FRONT CONTROL PWB
SLOT PANEL
REMOVING THE SPEAKER
Speaker back side
Fig. 2
Fig. 1

1.2 DEMAGNETIZATION PROCEDURE

1.2.1 CAUTION

(1) Use a rod-type demagnetization coil.

NOTE:

Never use a ring-shaped demagnetization coil.

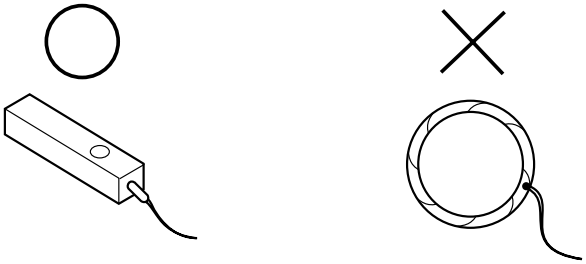

(2) Keep the demagnetization coil at a distance of more than 1.5 cm from the CRT screen and the main unit during use.

(3) When demagnetizing the CRT screen, hold the demagnetization coil perpendicularly to the CRT screen.

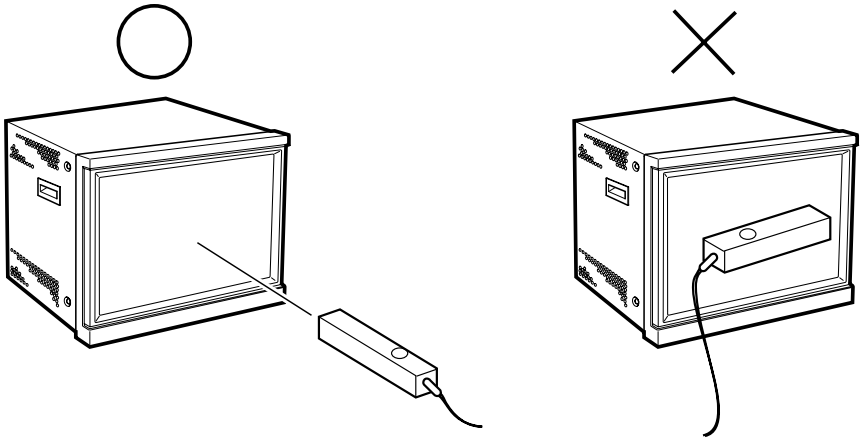

(4) When demagnetizing the outer cabinet of the unit, use the demagnetization coil in the orientation as shown below.

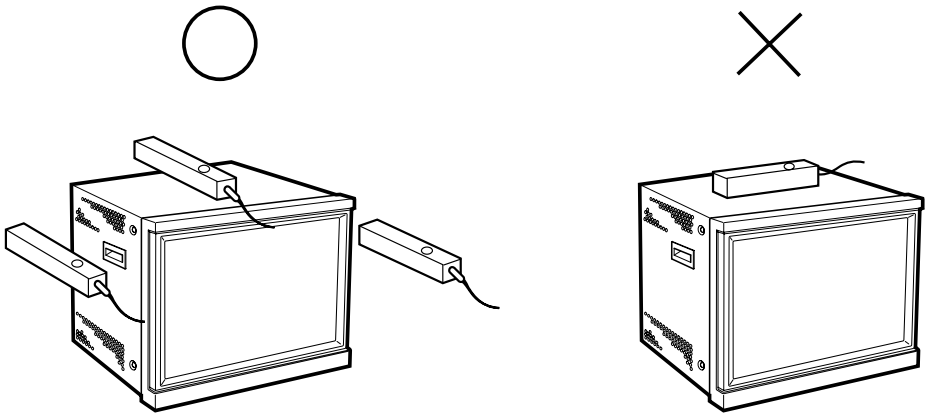

1.2.2 DEMAGNETIZING THE CRT SCREEN

(1) While holding the power button of the demagnetization coil, move it to approach the CRT screen area that has color irregularities. (Keep the demagnetization coil at a distance of more than 1.5 cm from the screen.)
(2) From the area with the colour irregularities, move the demagnetization coil as if drawing a spiral toward the center of the CRT screen.
(3) Move the demagnetization coil slowly away from the center of the CRT screen.
(4) When the demagnetization coil comes to about 1 meter from the CRT screen, release the demagnetization coil power button.
(5) If the color irregularities are still observed, repeat the above steps once more.

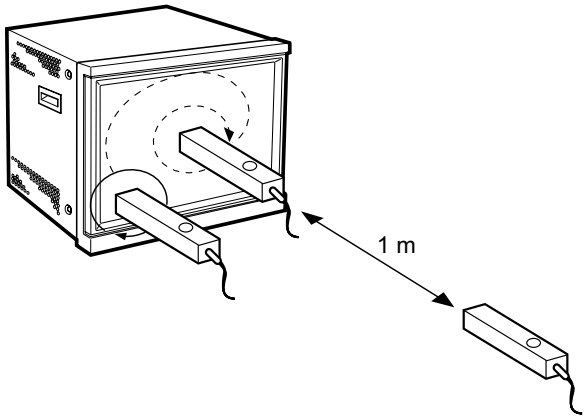

1.2.3 DEMAGNETIZING THE OUTER CABINET OF THE UNIT

(1) While holding the power button of the demagnetization coil, move it to approach the outer cabinet of the unit. (Keep the demagnetization coil at a distance of more than 1.5 cm from the cabinet.)
(2) Keep the demagnetization coil in the same orientation, and move it around the cabinet as if drawing a circle around the side and top panels of the unit.
(3) Move the demagnetization coil slowly away from the outer cabinet of the unit.
(4) When the demagnetization coil comes to about 1 meter from the unit, release the power button of the demagnetization coil.

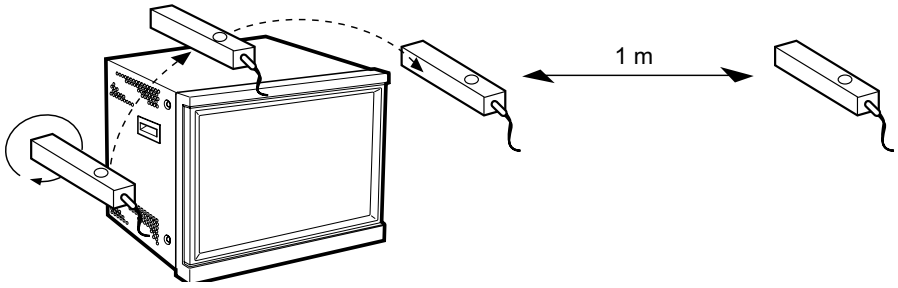

1.3 MEMORY IC REPLACEMENT

1.3.1 MEMORY IC

The unit incorporates a nonvolatile Memory IC, which stores data on the video and deflection systems, etc.
When it is replaced with an IC without the data stored in it, the set may malfunction or the video may become abnormal when the unit is turned on.
When replacing the Memory IC, be sure to use an IC in which the data (initial values) has already been written.

1.3.2 MEMORY IC REPLACEMENT PRECDURE

1. Turn the unit off and unplug the power cord from the power outlet.
2. Replace the Memory IC with a new Memory IC storing the initial setting value data.
3. Plug the power cord into the power outlet and turn the unit on.
4. Check the SETUP MENU and set its items as required.
   (1) While holding down the ▼ key, press the **VOL -** (◄) key.
   (2) The SETUP MENU appears (Fig. 1).
   (3) Check the items in the SETUP MENU by comparing them with the data in the table on page DIS-6.
   If any item is set differently, set it as required.
5. Check the MAIN MENU and set its items as required.
   Press the **[MENU]** key to display the MAIN MENU (Fig. 2). Check the items in the MAIN MENU by comparing them with the data in the table on page DIS-7. If any item is set differently, set it as required.
6. Adjust the items that can be adjusted on the front panel. (Some items cannot be adjusted unless the required signal is input.)
7. Check that the initial values of the items in the SERVICE MENU (Fig. 3). If any item is set differently, set it as required.
   For the setting method and the initial values, see the corresponding pages for "**SERVICE ADJUSTMENTS**" in this manual.

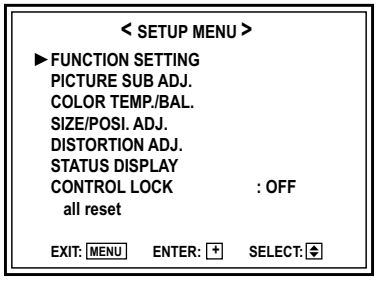

Fig. 1

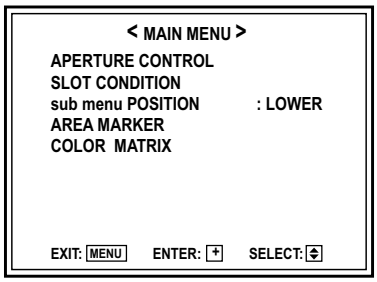

Fig. 2

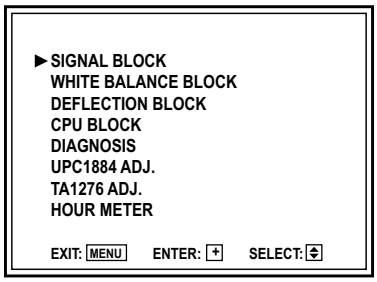

Fig. 3

1.3.3 FACTORY SETTING VALUE

■ INITIAL SETTING VALUE TABLE [SET-UP MENU]

Setting Item	Data / Variable range	Initial setting value	Remarks
FUNCTION SETTING			
COLOR SYSTEM	AUTO / NTSC / PAL	AUTO	Apply the NTSC/PAL signal
SYNC SELECT	INT. / EXT.	INT.	
RUSH DELAY TIME	STD. / SLOW	STD.	
TALLY SELECT	GREEN / RED	GREEN	
REMOTE SYSTEM	MAKE / TRIGGER	MAKE	
E.AUDIO GROUP	1G / 2G / 1-2G	1G	
HOUR METER X 100h	000 ~ 655	000	
PICTURE SUB ADJ.			
CONTRAST	-20 ~ +20	00	
BRIGHT	-20 ~ +20	00	
CHROMA	-20 ~ +20	00	
PHASE	-20 ~ +20	00	
NTSC SETUP	00 / 75	00	
COMPO. LEVEL	SMPTE / B00 / B75	SMPTE	Apply the Component signal
COLOR TEMP. / BAL.			
COLOR TEMP.	LOW / HIGH	LOW	
BLUE DRIVE	MIN ~ MAX (127 steps)	000	
RED DRIVE	MIN ~ MAX (127 steps)	000	
GREEN CUTOFF	MIN ~ MAX (205 steps)	000	
BLUE CUTOFF	MIN ~ MAX (205 steps)	000	
RED CUTOFF	MIN ~ MAX (205 steps)	000	
SIZE / POSI. ADJ.			
H.SIZE	-20 ~ +20	00	Reduced to 00 ~ +20 during the under-scan mode.
H.POSITION	-20 ~ +20	00	
V.SIZE	-20 ~ +20	00	
V.POSITION	-20 ~ +20	00	
ZOOM H. SIZE	-20 ~ 00	00	
ZOOM V. SIZE	-20 ~ +20	00	
DISTORTION ADJ.			
PINCUSHION	-20 ~ +20	00	
PIN.BALANCE	-20 ~ +20	00	
PARALLELOGRAM	-20 ~ +20	00	
TRAPEZOID	-20 ~ +20	00	
ROTATION	-31 ~ +31	00	
STATUS DISPLAY			
STATUS DISPLAY	ON / OFF	ON	
LEVEL METER ch	OFF/1:2/12:34/31:24/123:456/1-8	OFF	
BAR TYPE	3 COLORS / WHITE-1 / WHITE-2	3 COLORS	
REFERENCE LEVEL	-20dB / -18dB	-20dB	
OVER LEVEL	-8dB / -6dB / -4dB / -2dB	-8dB	
BAR BRIGHTNESS	HIGH / LOW	HIGH	
CONTROL LOCK	ON / OFF	OFF	

■ INITIAL SETTING VALUE TABLE [MAIN MENU]

Setting Item	Data / Variable range	Initial setting value
APERTURE CONTROL		
LEVEL	00 ~ 10	00
CONTROL FREQ.	HIGH / LOW / OFF	HIGH
SLOT CONDITION INPUT A ~ F	Type of boards installed in the rear panel slots. SLOT1 : INPUT A, B SLOT2 : INPUT C, D SLOT3 : INPUT E, F	
sub menu POSITION	LOWER / UPPER	LOWER
AREA MARKER		
MARKER SELECT	OFF / LINE /S. HALF / HALF+L / S. BLK / BLK. +L	OFF
ZOOM	OFF / ON	OFF
ASPECT SELECT	4 : 3 / 13 : 9 / 14 : 9	4 : 3
SAFEY AREA	OFF / 80% / 88% / 90%	OFF
R-MARKER SELECT	OFF / LINE / S. HALF / HALF+L / S. BLK / BLK. +L	OFF
R-ZOOM	OFF / ON	OFF
R-ASPECT SELECT	4 : 3 / 13 : 9 / 14 : 9	4 : 3
R-SAFETY AREA	OFF / 80% / 88% / 90%	0FF
COLOR MATRIX	SELECT : MANUAL / ITU601 or ITU709 [Example when MANUAL is set] R-Y PHASE : 90/92/94/112 R/B GAIN : 0.56/0.68/0.79/0.86 G-Y PHASE : 236/240/244/253 G/B GAIN : 0.30/0.34/0.40/0.45	NORMAL 90 0.86 244 0.30

■ INITIAL SETTING VALUE TABLE [FRONT PANEL CONTROL]

Setting Item	Data / Variable range	Initial setting value
POWER	ON / OFF	OFF
INPUT SELECT	INPUT A ~ F	INPUT A
COLOR OFF AREA MARKER PULSE CROSS ASPECT UNDER SCAN SCREENS CHECK DEGAUSS	ON / OFF	OFF
VOLUME	00 ~ 50	10
CONTRAST BRIGHT CHROMA PHASE	POTENTIOMETER	Center click position

1.4 REPLACEMENT OF CHIP COMPONENT

1.4.1 CAUTIONS

(1) Avoid heating for more than 3 seconds.
(2) Do not rub the electrodes and the resist parts of the pattern.
(3) When removing a chip part, melt the solder adequately.
(4) Do not reuse a chip part after removing it.

1.4.2 SOLDERING IRON

(1) Use a high insulation soldering iron with a thin pointed end of it.
(2) A 30w soldering iron is recommended for easily removing parts.

1.4.3 REPLACEMENT STEPS

1. How to remove Chip parts

[Resistors, capacitors, etc.]

(1) As shown in the figure, push the part with tweezers and alternately melt the solder at each end.

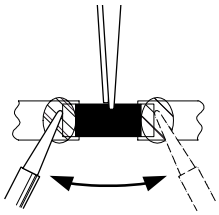

(2) Shift with tweezers and remove the chip part.

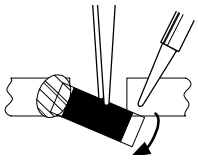

[Transistors, diodes, variable resistors, etc.]

(1) Apply extra solder to each lead.

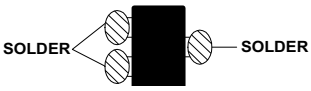

(2) As shown in the figure, push the part with tweezers and alternately melt the solder at each lead. Shift and remove the chip part.

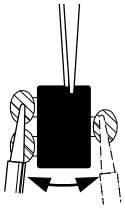

Note :

After removing the part, remove remaining solder from the pattern.

2. How to install Chip parts

[Resistors, capacitors, etc.]

(1) Apply solder to the pattern as indicated in the figure.

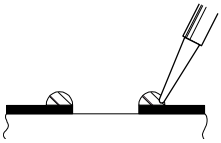

(2) Grasp the chip part with tweezers and place it on the solder. Then heat and melt the solder at both ends of the chip part.

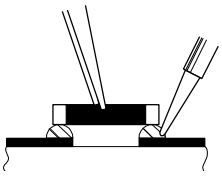

[Transistors, diodes, variable resistors, etc.]

(1) Apply solder to the pattern as indicated in the figure.
(2) Grasp the chip part with tweezers and place it on the solder.
(3) First solder lead A as indicated in the figure.

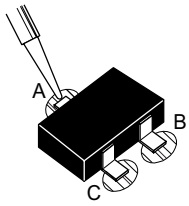
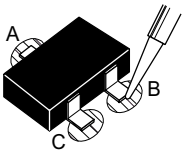
(4) Then solder leads **B** and **C**.